PSoC 4 Scanning SAR ADC (Scan_ADC)

1.20

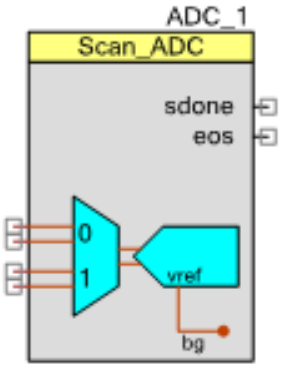

Features

- Selectable 8-, 10-, or 12-bit resolution
- Interleaved or channel-sequential averaging in hardware
- Up to 16-bit resolution with averaging
- Aggregate sample rate up to 1 Msps
- Single-ended and Differential input modes
- Optional 2nd order switched-cap filter on channel 0
- Scheduler optimizes settling time and clock to fit scan rate
- Scan up to sixteen analog signals automatically
- Four distinct configurations

General Description

The Scanning SAR ADC component gives configuration-, schematic-, and firmware-level support for the version of the SAR ('Successive Approximation Register') ADC present on some members of the PSoC family. Up to sixteen analog channels (from sources dependent on the specific device) can be automatically scanned, either on demand or continuously, with the results placed in individual result registers. One of the channels may be routed through a 2nd order switched-cap filter. The scan scheduler adjusts internal sampling behavior and clock to accommodate specific settling time and overall scan rate requirements. Averaging can be applied to any channel in a scan.

When to Use a Scanning SAR ADC

The Scanning SAR ADC is the component used to access the ADC functionality in members of the 'PSoC Analog Coprocessor' family. It is flexible and versatile in both high sample rate continuous-sampling applications (timed entirely in hardware), and lower-rate ad-hoc triggered scan applications.

The offset and span of the ADC depend on the parameters configured for the component. Regardless of these settings, the analog signals connected to the PSoC's pins must be between V_{SSA} and V_{DDA}. For some settings, 'rail-to-rail' conversion is possible.

PRELIMINARY

Input/Output Connections

This section describes the various input and output connections for the Scanning SAR ADC that may appear as terminals on the component symbol. An asterisk (*) after the terminal name indicates that the terminal may not be present on the symbol under certain conditions.

Note Throughout this document when signal connections are abbreviated, ‘s/e’ means single-ended, ‘diff’ means differential.

Note During the sampling time for a given channel, its +Input, -Input, and/or vneg input signals connect directly to the input capacitor of the ADC core, and must charge that capacitor up before the actual conversion. An input settling time value can be entered into each channel’s parameter selections to allow for that channel’s source impedance.

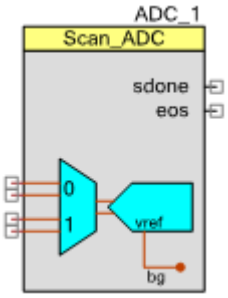

+Input – Analog Input

This input (not marked; it is always the upper terminal of a differential input pair on the symbol) is the ‘positive’ (also called non-inverting) analog signal input to the ADC. There are always the same number of ‘positive’ analog signal input terminals as there are channels selected, whether they are specified as differential or single-ended.

The following symbol has two channels, with channel zero configured as a single-ended channel using vref as the negative terminal.

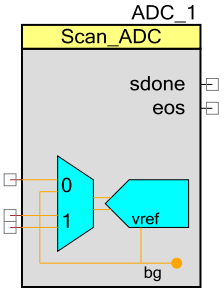

–Input – Analog Input*

This input (not marked; it is always the lower terminal of a differential input pair on the symbol) is the ‘negative’ (also called inverting) analog signal input to the ADC. It is only present for channels that have been declared as differential. On all channels declared as single-ended channels, the inverting input of the ADC is connected instead to the Vneg signal, described

below. There are always the same number of ‘negative’ analog signal input terminals as there are differential channels selected.

vneg – Analog Input*

This is a common negative input reference. This terminal is present only if one or more analog channels are declared as a single-ended input and the **Vneg for S/E** parameter is set to **External**.

soc – Digital Input *

This terminal is present if the “Use signal on soc terminal” box is checked in any configuration. See the **Sample Mode** section for a description of how the soc terminal is used by the component.

PSoC Creator components can be stopped and started with firmware API calls. To allow for circuit stabilization, the first **soc** rising edge should be generated at least 10 µs after the component is started.

vagnd – Analog Input *

This terminal appears on the symbol if the filter function available on channel 0 is enabled. It is intended to be connected to the locally-generated voltage used for referencing analog signals (sometimes called Analog ground) and is connected up by the user.

vref – Analog Input *

This terminal appears on the symbol if the **Vref** parameter is set to **Symbol terminal voltage**.

aclk – Clock Input *

This terminal allows a PSoC clock to be connected to the component. This mode is used when it is important that the clock used by the ADC is identical to that used by another component on the schematic.

You can add this optional terminal if you check the **‘Show analog clock (aclk) terminal’** selection, otherwise, the terminal is hidden. Without this terminal, the component will auto-select the ADC clock frequency, which may allow closer matching of user-specified sample rate.

sdone – Digital Output

This signal goes high for two ADC clock cycles to indicate that the ADC has sampled the current input channel. Internally, this signal is used to advance the signal multiplexer onto the next channel.

eos – Digital Output

A rising edge on the end of scan (eos) output means that the current scan is complete. At this moment, conversion result registers contain valid sample data for all enabled channels. Internally, it is used to provide an interrupt.

Component Parameters

This section covers the various parameters that can be altered or inspected through the setup customizer of the component, grouped within a series of tabs. The customizer supports up to four distinct configurations, each with its own schematic symbol and configuration sub-tab. To explore this, drag a Scanning SAR ADC onto your design and double click it to open the Configure dialog.

For any selectable parameter, the option shown here in **bold** is the default.

Config Tab (for each configuration)– Scan Sub-Tab

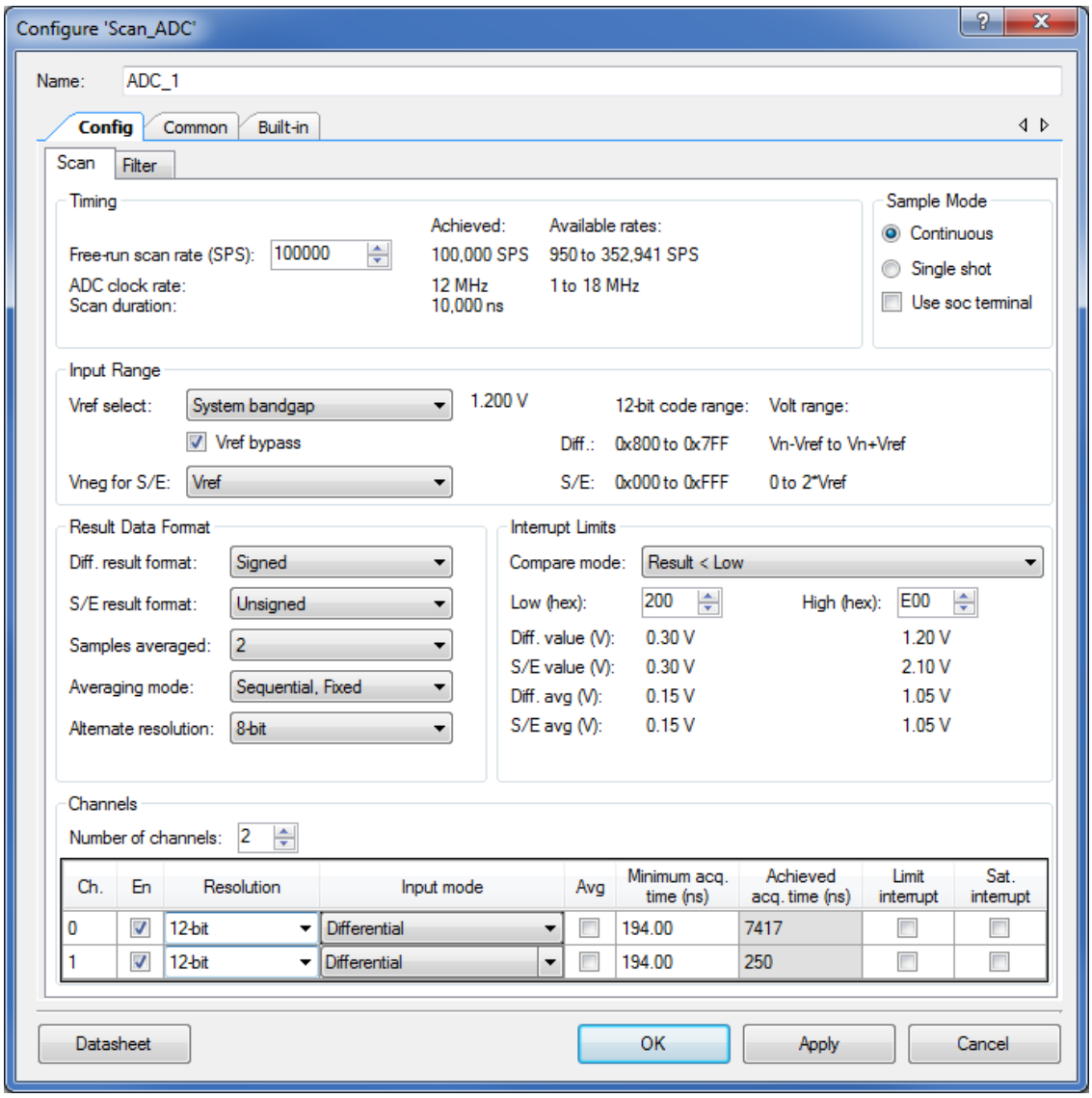

Timing

Free-run scan rate (SPS)

This is the fundamental parameter for the Scanning SAR ADC; the desired rate at which completed scans should be executed when the component is running in Continuous mode. It is the rate at which each signal included in the scan is sampled. The Scanning SAR ADC component customizer has a schedule calculator that works to get this sample rate as close as possible to the value that is entered. It does this by intelligent selection of ADC clock frequency (when an internal clock source is selected) and channel sampling times, taking all the other user-entered requirements into account.

When selected, the ADC clock rate is automatically calculated based on the number of channels, averaging, resolution, and acquisition time parameters to meet the entered sample rate.

Achieved (display only)

This field displays the currently-achieved scan rate that the component will implement in a running system. The scheduler adjusts everything available to get as close as it can to the desired scan rate, but it is not always possible to achieve the desired scan rate.

The achieved scan rate is dependent on the following:

- ADC clock rate
- Number of channels
- Averaging
- Resolution
- Achieved acq. time

The sample time for a single channel is the time required to acquire the analog signal and convert it to a digital code. The sample time is represented by the following equation:

$$Channel\ Sample\ Time = \ Achieved\ acq.time\ + \frac{(Resolution + 2.5)}{ADC\ clock\ rate}$$

Channels using one of the sequential “Averaging modes” are sampled “Samples averaged” times in each scan. Channels that are not averaged or use Interleaved averaging mode are only sampled once per scan.

The achieved scan rate is the total of each channel’s sample time (if the channel has averaging selected this is multiplied by the number of sequential samples). The achieved scan rate for N channels is:

*Achieved scan rate = (Ch. 0 Sample Time * samples/scan) +(Ch. N-1 Sample Time * samples/scan)*

Example Configuration 1

- ADC clock rate = 18 MHz
- Number of channels = 1
- CH0 Averaging = None
- CH0 Resolution = 12-bit
- CH0 Achieved acq. Time = 194 ns

Achieved Scan Rate = $\left(194ns + \frac{(12 + 2.5)}{18MHz}\right) * 1 = 1\ MSPS$

Example Configuration 2

- ADC clock rate = 18 MHz
- Number of channels = 3
- CH0 Averaging = None
- CH0 Resolution = 12-bit
- CH0 Achieved acq. Time = 194 ns
- CH1 Averaging = Sequential, Sum with 4 samples averaged
- CH1 Resolution = 12-bit
- CH1 Achieved acq. Time = 194 ns
- CH2 Averaging = None
- CH3 Resolution = 8-bit
- CH2 Achieved acq. Time = 194 ns

Achieved Scan Rate = $\left(\left(194ns + \frac{(12 + 2.5)}{18MHz}\right) * 1\right) + \left(\left(194ns + \frac{(12 + 2.5)}{18MHz}\right) * 4\right) + \left(194ns + \frac{(8 + 2.5)}{18MHz}\right) * 1 = 173\ kSPS$

Available rates (display only)

This field shows the approximate minimum to maximum range of scan rates that can currently be attained with the setup as defined. If the desired free-running rate is less than the minimum rate shown here, the solution is to set up a TC/PWM timer on the schematic and use it to trigger the ADC periodically (in single shot triggered mode).

ADC clock rate (display only)

This field displays the currently-selected actual ADC clock frequency. It is an integer divide from the PSoC's main high frequency clock.

Scan Duration (display only)

This field gives the duration of the achieved overall scan, in ns.

Sample Mode

The Scanning SAR ADC can operate in one of two modes:

Sample mode	Description
Continuous	Once started, Scanning SAR ADC runs continuously until stopped
Single shot	Scanning SAR ADC takes one scan per valid firmware or hardware trigger

Use soc terminal

The Scanning SAR ADC can always be started and stopped in firmware with the ADC_StartConvert() and ADC_StopConvert() functions.

If this box is checked, hardware triggering via the start-of-conversion (soc) terminal on the component is enabled. The soc terminal is created on the component symbol by checking the "Use signal on soc terminal" on the Scan sub tab.

With this hardware triggering enabled, in single-shot mode a single complete scan of the Scanning SAR ADC is triggered by a positive-going edge applied to the soc terminal. In continuous mode, the ADC takes scans back-to-back if a '1' level is applied to the soc terminal.

Enabling hardware triggering does not suppress the firmware triggering function. Exercise caution in interpreting data sets resulting from a combination of both forms of triggering, since the trigger source is not reflected in the output data.

Input range

Vref select

The **Vref** parameter selects the reference voltage source that is used for the ADC core, and optionally enables a numeric value to be given to it if the customizer does not know it.

Reference	Description
Design-wide reference	This is the reference voltage that is assigned by Creator for multiple use in the design.
System Bandgap	**Dedicated internal connection to the main 1.2 V reference**
Symbol terminal	The voltage fed to this terminal on the symbol is used as the reference
External device pin	Depending on the device part number, this pin is a dedicated or shared pin, used both for the Vref off-chip bypass capacitor and for the injection of a reference external to the chip. Checking the Vref bypass box has no effect in this mode.
Vdda/2	An internal resistor divider produces Vdda/2 as a reference
Vdda	Uses the internal Vdda. An off-chip bypass capacitor has no effect in this mode.

The internal Vref startup time varies with different bypass capacitors. This table lists two common values for the bypass capacitor and its startup time specification.

Internal Vref Startup Time	Maximum Specification
Startup time for reference with external capacitor (1 µF)	2 ms
Startup time for reference with external capacitor (100 nF)	200 µs

Vref value (user entry or parameter display)

To the right of the Vref select pull-down, this parameter either displays the reference voltage value that is being used for the SAR ADC (if this is 'known' to PSoC Creator) or enables the entry of a value for display purposes, if only the user knows this value.

Vref shall not be less than 1.0 V, and setting it so causes an error.

Vref bypass

Checking this box indicates to the component customizer that you have attached an off-chip bypass capacitor to the specific device pin set aside for this. It permits the component to select higher ADC clock rates and therefore significantly higher overall scan rates.

The use of an off-chip reference bypass capacitor (ideally 33 nF or greater, ideally X7R dielectric or better) is recommended in all systems. It should only be omitted when there is really no room for it on the build. When omitted, the maximum aggregate sample rate is reduced by at least a factor of eighteen, and conversions are more prone to digital noise on the circuit board.

Vneg for S/E

This parameter selects where the negative input to the SAR ADC is connected if any channels are configured for single-ended operation.

Negative input	Description
Vssa	Input range is 0.0 to Vref, effective resolution will be one bit less than selected in the customizer.
Vref	**Input range is 0.0 to Vref*2.**
External	This mode is configured for "quasi-differential" inputs. Multiple channels share one common –ve (inverting) connection. This is often used for common-mode rejection of ground noise in multi-channel systems.

12-bit code range (display only)

This field displays what code ranges will be returned by the SAR ADC. The values displayed are truncated at 12-bits. However, the results returned will be sign extended to the 16 or 32 bit format depending on which GetResult function is used.

Volt range (display only)

This field displays the voltage range of the SAR ADC using the selected Vref. For single ended channels the selection of Vneg is also used to determine the range.

Result Data Format

Differential (Diff.) result format

This parameter determines whether or not the result from a differential measurement is **Signed** or Unsigned. This is a global setting for all differential channels. Results are always right-justified.

S/E result format

This parameter determines whether or not the result from a single-ended measurement is Signed or **Unsigned.** This is a global setting for all single-ended channels. Results are always right-justified.

The following table shows how these parameters affect conversion of the input voltage to the 12 bit digital sample value.

s/e or diff	Signed / Unsigned	Single-ended negative input	-Input	+Input	Result Register
s/e	Unsigned: Use this mode only with caution	Vssa	Vssa	Vref Vssa -noise	0x0FFF 0x0800 0x07xx (this causes a wrap-round in calculations)
s/e	Signed	Vssa	Vssa	Vref Vssa -noise	0x07FF 0x0000 0xFFxx
s/e	Signed	External	Vneg	Vneg+Vref Vneg Vneg-Vref	0x07FF 0x0000 0xF800
s/e	***Unsigned***	***Vref***	***Vref***	***2*Vref*** ***Vref*** ***Vssa***	***0x0FFF*** ***0x0800*** ***0x0000***
s/e	Signed	Vref	Vref	2*Vref Vref Vssa	0x07FF 0x0000 0xF800
diff	Unsigned	N/A	Vx	Vx+Vref Vx Vx-Vref	0x0FFF 0x0800 0x0000
diff	**Signed**	**N/A**	**Vx**	**Vx+Vref** **Vx** **Vx-Vref**	**0x07FF** **0x0000** **0xF800**

For single-ended conversions with the **Vneg for S/E** parameter set to **Vssa**, the usable conversion is effectively 11-bit. Noise or offset on the **+Input** terminal with a level slightly below Vssa produces a result that appears more positive than full scale. This can cause severe system problems, so this mode should be used with caution.

Samples averaged

This parameter sets the averaging rate for any channel with the averaging option enabled. This is a global setting for all channels that have averaging enabled. Default value is **2**.

Note that the interleaved averaging option does not support result realignment, it is a simple accumulation. For average counts of greater than 16, it is possible (under large-signal conditions) for the result register to overflow and wrap round. This error is not detected by the hardware. Only use more than 16 sample averaging in interleaved mode if you are satisfied that this wrap-round will not occur on your particular signals.

Averaging mode

This parameter sets how the hardware averaging mode operates. If ***Sequential, Sum*** is selected, each ADC conversion result is added to a running sum. It's then shifted so that it fits into a 16-bit result word. If the ***Sequential, Fixed*** mode is selected, accumulated result is shifted back into a 12-bit result.

In either sequential mode, the scan pauses on the channel being averaged and all the samples for the average are taken before moving onto the next channel in the scan. This can reduce the maximum available scan rate substantially when any channel in the scan is averaged in this way. For this reason, the Interleaved, Accumulate mode is also available. In Interleaved mode, only one conversion is taken on each channel before moving on, but channels that have averaging enabled get the preset number of samples accumulated in their result register.

In ***Interleaved, Sum*** *mode* the overall scan rate is not reduced. This means that channels not requiring averaging can still be sampled at the original scan rate. An end of scan interrupt is still produced at the end of every scan; channels that utilize interleaved averaging are not marked as 'valid' until the correct number of scans have been taken.

If every channel is set to use averaging and the mode is set to Interleaved, Accumulate then the rate of end-of-scan interrupts is significantly reduced.

Alternate resolution

This parameter sets the alternate ADC resolution to either **8** or 10 bits. This alternate resolution can be selected for any channel instead of the native 12-bit. Note that in alternate resolution mode the hardware does not support averaging, and the component will issue a warning if the two modes are set together on any channel.

Interrupt Limits

Compare mode

The Scanning SAR ADC supports range detection to allow for the automatic detection of sample values compared to two programmable thresholds without CPU involvement. A range detect is defined by two global thresholds and a condition.

This parameter sets the condition under which a limit condition will occur and trigger a maskable range detect interrupt.

Compare Mode	Description
Result < Low	Below range
Low <= Result < High	Inside range
High <= Result	Above range
(Result < Low) or (High <= Result)	Outside range

Low (hex)

This parameter sets the low threshold in hex for a limit compare. Default value is **0x0200**. For Signed modes, the SAR results are two's-complement.

High (hex)

This parameter sets the high threshold in hex for a limit compare. Default value is **0x0E00**.

A range detect is done after averaging, alignment, and sign extension (if applicable). In other words, the thresholds values must have the same data format as the final 16-bit conversion result.

Equivalent input voltages:

Directly beneath the low and high limit entry fields, the corresponding voltage values are displayed for individual and averaged differential and single-ended measurements.

Channels

Number of channels

This parameter selects how many input signal channels are scanned. By default, there are **2** channels. The maximum number of channels is 16. The minimum number of channels is 1.

A set of parameters is available for each entry. The actual number of entries depends on the **Number of channels** parameter. The symbol shows as many channels as are selected by the **Number of channels** parameter even if the channel is not enabled.

Ch.

Shows the number of the channel, starting from 0. The number of entries here is determined by the Number of Channels parameter.

En

If checked, the channel is enabled in the scan. If unchecked, no time is consumed and the scan jumps immediately to the next enabled channel in the scan list.

Resolution

This parameter selects either **12** bits or the alternative (ALT) resolution setting.

Input mode

For any channel, this parameter selects the input mode to the ADC as either **Differential** or Single ended. In addition, channel 0 can be configured to take its signal through a dedicated 2nd order filter whose frequency response parameters can be set over a wide range. The filter has a single-ended input, and the output of the filter is measured with respect to the voltage applied to the **vagnd** terminal. See the Switched-capacitor filter section for more information about the filter.

Avg

This option selects whether or not the channel is averaged. When selected and a sequential averaging mode is selected, the SAR sequencer stays on the channel and takes N readings, then adds the results together. The number of samples taken is determined by the **Samples averaged** parameter. Averaging is available only for the maximum **Resolution** selected in a particular channel. Select ALT resolution for all channels to allow averaging on fewer than 12 bits resolution. Averaging is always right-aligned.

Minimum acq. time (ns)

The user can enter a minimum acquisition time (in ns) that the input sampling process will dwell on this channel before actually making the conversion. The field is editable but is pre-populated with the shortest value currently possible with the system clock parameters.

Achieved acq. time (ns)

This display field shows the acquisition time (in ns) that the scheduler has selected. It is always equal to or higher (longer duration) than the user-requested value.

Limit interrupt

This option allows you to enable an interrupt if any of the channels trigger the limit criteria set by the **Low** or **High** thresholds and the **Compare mode** parameter.

Sat. interrupt

This option allows you to enable an interrupt from any channel where the result is saturated at either the lowest or the highest value for the given resolution and format.

Config Tab – Filter Sub-Tab

This tab sets up the behavior of the 2nd order switched-capacitor filter that can optionally be connected to channel 0 (the first channel in the scan).

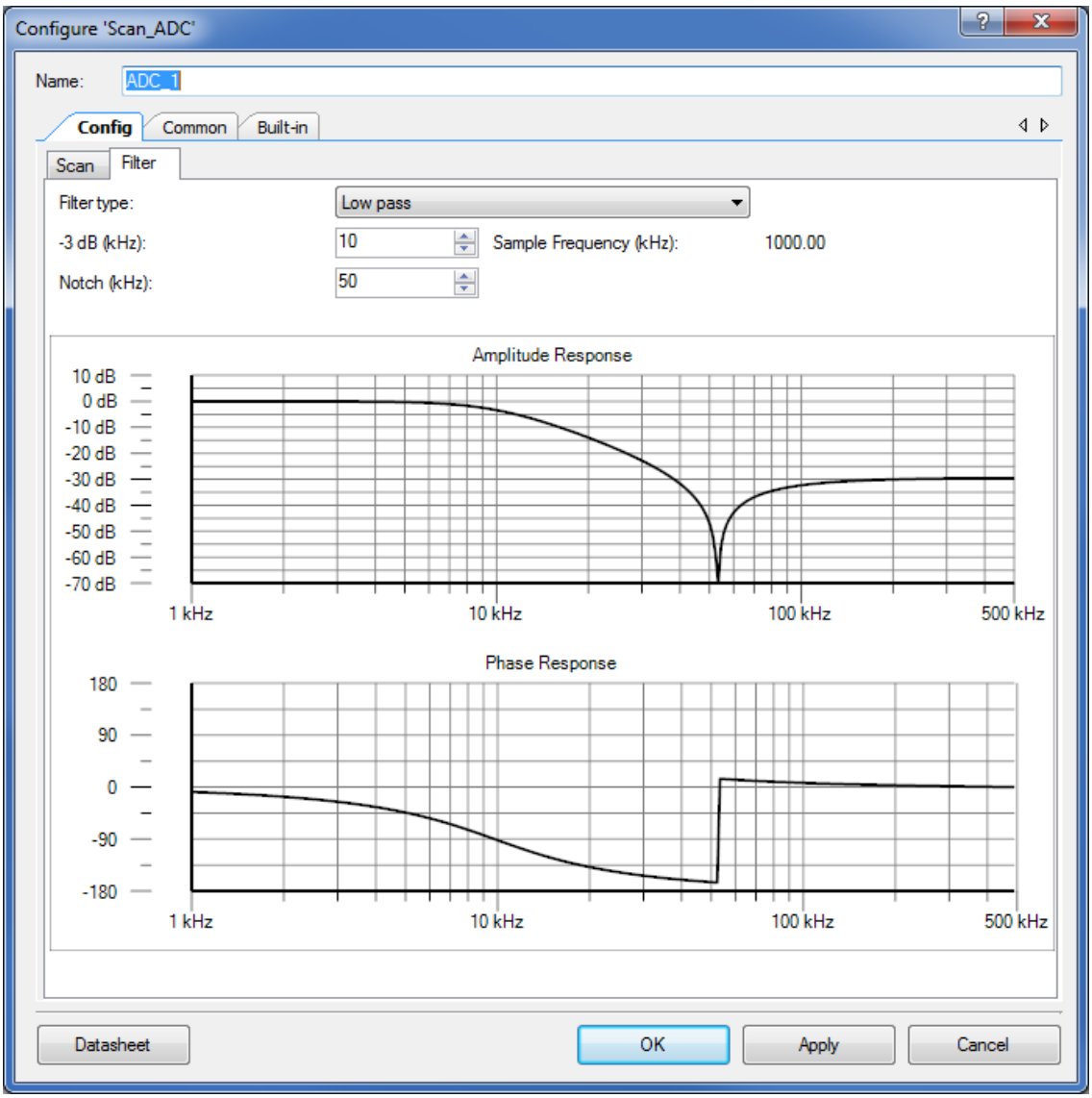

Filter type

The filter implements four different response types: lowpass, highpass, bandpass and notch (also called bandstop). The lowpass and highpass filters have a programmable stopband notch

frequency. All the filter types are calculated with the so-called maximally-flat response form, of which the well-known Butterworth filter is a simple example.

All filters have a peak passband gain of unity, i.e. 0 dB.

Frequency entry fields

Underneath the pull-down for filter type are two frequency entry fields, whose titles and purpose change with the filter types.

For the lowpass and highpass filter, the user specifies the desired frequency of the -3 dB point, and also the desired frequency of the ‘notch’ in the stopband. That can be useful for achieving additional attenuation at a specific frequency.

For the bandpass filter, the user enters the desired frequencies for the lower and upper -3 dB response points. This is more direct than entering a center frequency and a bandwidth, which would not make clear where those -3 dB frequencies actually are.

For the Notch filter, the user specifies the frequency of the notch, and a -3 dB shoulder. The -3 dB shoulder can be below or above the notch frequency.

The customizer will issue appropriate errors if the user enters frequency combinations that are not meaningful for the type of filter. Each filter type has its own stored frequency settings, so the frequencies in the user entry boxes may change when the filter type selection is changed.

In this version of the Scanning SAR ADC there is no API function for changing the filter behavior. This is due to the close integration of the filter clocking requirements with the acquisition timing needs of the ADC core.

Note The filter has a single-ended input, which is referred to an ‘analog ground’ voltage which is applied to the **vagnd** terminal, which is always present on the schematic if the filter has been selected. The optimum value for this voltage is half the analog supply voltage. This voltage is typically available through a reference voltage component on the PSoC Creator schematic. A suitable voltage must be connected to this terminal if it is present.

Sample Frequency (kHz) (display only)

This display field shows the selected sample frequency of the filter. The maximum sample frequency is 1MHz. The minimum sample frequency is set by the filter requirements. The minimum sample frequency will be at least the Nyquist Rate. The filter sample frequency will also be an integer multiple of the ADC clock rate to ensure proper alignment between the ADC and the filter.

Debugging Filter Errors

See Appendix A for more information about filter scheduling errors.

Common Tab

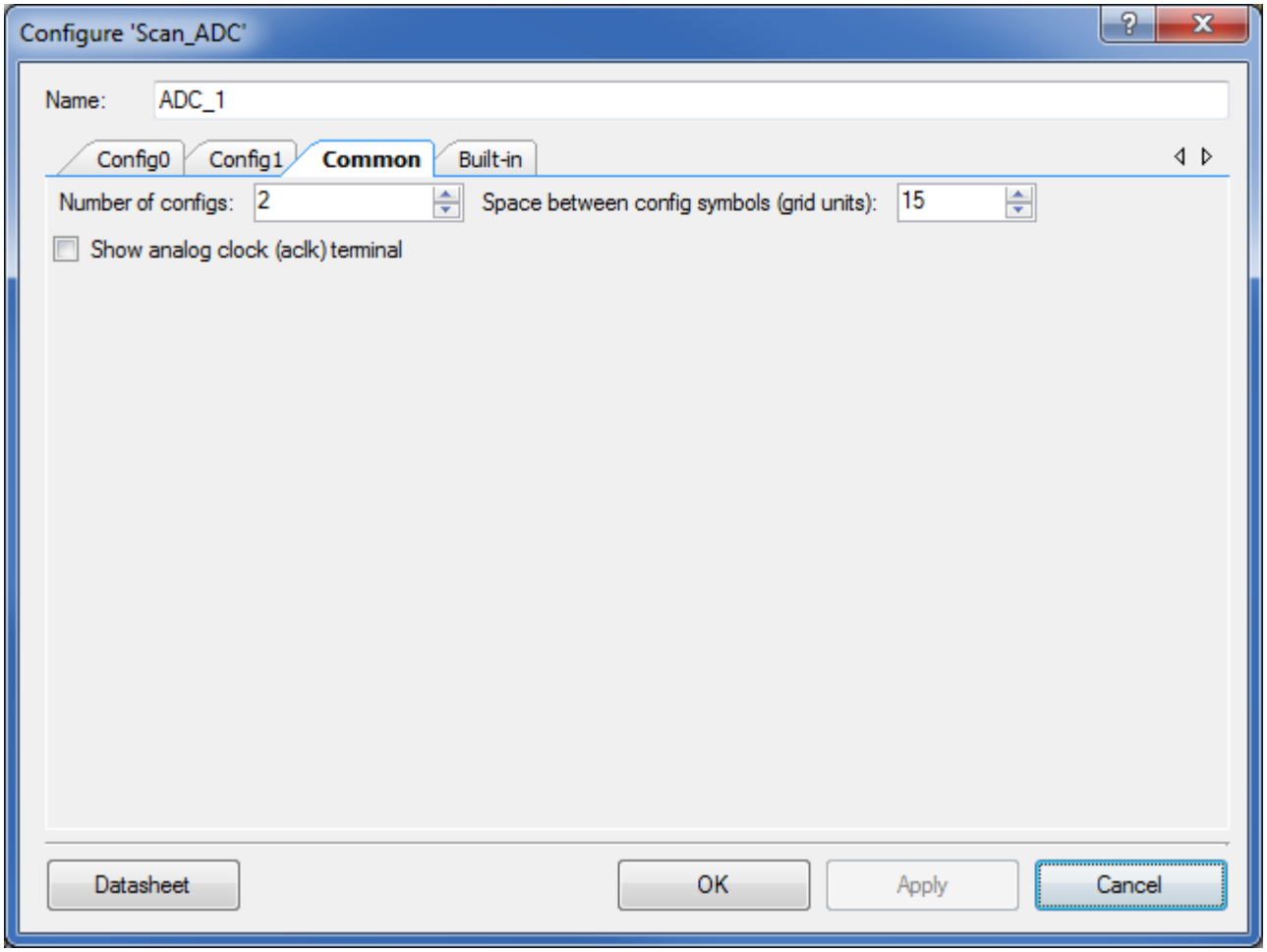

Number of configs

Between **1** and 4 complete configurations can be defined in the component. There is an API function call to select which configuration is in operation. Each configuration gets its own symbol and its own tab.

Space between config symbols (grid units)

When using more than one configuration, this controls the space between the symbols. This space can be between 10 and 45 grid units wide, the default is **15**.

Show analog clock (aclk) terminal

If this box is checked, the external analog clock (aclk) terminal will appear on the symbol.

Application Programming Interface

Application Programming Interface (API) routines allow you to configure the component using software. This table lists and describes the interface to each function. The following sections cover each function in more detail.

By default, PSoC Creator assigns the instance name "ADC _1" to the first instance of a component in a given design. You can rename it to any unique value that follows the syntactic rules for identifiers. The instance name becomes the prefix of every global function name, variable, and constant symbol. For readability, the instance name used in the following table is "ADC".

Note Do not use the ADC_Stop() API to halt conversions. Instead use the ADC_StopConvert() API. If you use the ADC_Stop() API to halt conversions then later use the ADC_Start() and ADC_StartConvert() APIs to resume conversions, the first channel of the scan may be corrupt. The StopConvert() API will enable the Scanning SAR ADC to complete the current scan of channels. After the channel scan is complete, the Scanning SAR ADC will stop all conversions, which can be detected by the use of an ISR or the ADC_IsEndConversion() flag.

Note that no explicit functions for saving and loading the hardware state are provided. Everything needed to set up the SAR hardware is provided in the main API functions.

Functions

Function	Description
ADC_Start()	Performs all required initialization for this component and enables the power. The power will be set to the appropriate power based on the clock frequency.
ADC_StartEx()	Performs the same function as ADC_Start() as well as setting the interrupt vector to a user defined address.
ADC_Stop()	This function stops ADC conversions and puts the ADC into its lowest power mode.
ADC_SelectConfig()	Selects the predefined configuration for scanning. Disables and re-enables the SAR and filter (if filter used).
ADC_StartConvert()	For continuous mode, this API starts the conversion process and it runs continuously. In a triggered mode, this routine triggers every conversion.
ADC_StopConvert()	Forces the ADC to stop conversions. If a conversion is currently executing, that conversion will complete, but no further conversions will occur.
ADC_SetConvertMode()	Sets the conversion mode to either Single-Shot or continuous.
ADC_IRQ_Enable()	Enables interrupts to occur at the end of a conversion. Global interrupts must also be enabled for the ADC interrupts to occur.
ADC_IRQ_Disable()	Disables interrupts at the end of a conversion.
ADC_SetEosMask()	This function sets or clears the End of Scan (EOS) interrupt mask bit.
ADC_SetChanMask()	Sets enable/disable mask for all channels.

Function	Description
ADC_IsEndConversion()	Immediately returns the status of the conversion or does not return (blocking) until the conversion completes, depending on the retMode parameter.
ADC_GetResult16()	Gets the data available in the SAR result register, returns 16-bit
ADC_GetResult32()	Gets the data available in the SAR result register, returns 32-bit
ADC_SetLowLimit()	This parameter sets the low limit for a limit compare.
ADC_SetHighLimit()	This parameter sets the high limit for a limit compare.
ADC_SetLimitMask()	Sets which channels may cause a limit condition interrupt.
ADC_SetSatMask()	Sets which channels may cause a saturation event interrupt.
ADC_SetOffset()	Sets the offset of the ADC channel.
ADC_SetGain()	Sets the gain in counts per 10 volt for the ADC channel.
ADC_CountsTo_Volts()	Converts the ADC output to volts as a floating point number.
ADC_CountsTo_mVolts()	Converts the ADC output to millivolts.
ADC_CountsTo_uVolts()	Converts the ADC output to microvolts.
ADC_TrimFilterVos()	Runs an algorithm to reduce voltage offset using the UAB's opamp trim.
ADC_Sleep()	Stops the ADC operation and saves the configuration registers and component enable state.
ADC_Wakeup()	Restores the component enable state and configuration registers.

void ADC_Start(void)

Description: Performs all required initialization for this component and enables the power. The power will be set to the appropriate power based on the clock frequency.

Parameters: None

Return Value: None

Side Effects: None

void ADC_StartEx(cyisaddress address)

Description: This function starts the ADC and sets the Interrupt Service Routine to the provided address using the ADC_IRQ_StartEx() function. Refer to the Interrupt component datasheet for more information on the ADC_IRQ_StartEx() function.

Parameters: address: This is the address of a user defined function for the ISR .

Return Value: None

Side Effects: None

void ADC_Stop(void)

Description: This function stops ADC conversions and puts the ADC into its lowest power mode.

Parameters: None

Return Value: None

Side Effects: Don't use the Stop() API to halt conversions. Instead use the StopConvert() API. If you use the Stop() API to halt conversions then later use the ADC_Start() and ADC_StartConvert() APIs to resume conversions, the first channel of the scan may be corrupt. The StopConvert() API will enable the Scanning SAR ADC to complete the current scan of channels. After the channel scan is complete, the Scanning SAR ADC will stop all conversions, which can be detected by the use of an ISR or the ADC_IsEndConversion() flag.

void ADC_SelectConfig(uint32 config, uint32 restart)

Description: Selects the predefined configuration for scanning. Disables and re-enables the SAR and filter (if filter used).

Parameters: config: Number of configuration in the ADC.

restart: Determines if the ADC should be restarted after selecting the configuration.

Return Value: None

Side Effects: None

void ADC_StartConvert(void)

Description: In continuous mode, this API starts the conversion process and it runs continuously.

In Single Shot mode, the function triggers a single scan and every scan requires a call of this function. The mode is set with the Sample Mode parameter in the customizer. The customizer setting can be overridden at run time with the ADC_SetConvertMode() function.

Parameters: None

Return Value: None

Side Effects: None

void ADC_StopConvert(void)

Description: Forces the ADC to stop conversions. If a conversion is currently executing, that conversion will complete, but no further conversions will occur.

Parameters: None

Return Value: None

Side Effects: None

void ADC_SetConvertMode(uint32 mode)

Description: Sets the conversion mode to either Single-Shot or continuous. This function overrides the settings applied in the customizer. Changing configurations will restore the values set in the customizer.

Parameters: mode: Sets the conversion mode. See table below for details.

Options	Description
ADC_SINGLE_SHOT	Calling the ADC_StartConvert() function after setting mode this will trigger a single scan. Sets the SOC signal to be edge sensitive, each edge will trigger a single scan.
ADC_CONTINUOUS	Calling the ADC_StartConvert() function after setting this mode trigger continuous scanning. This mode sets the SOC signal to be level sensitive. The ADC will continuously scan while soc is active.

Return Value: None

Side Effects: None

void ADC_IRQ_Enable(void)

Description: Enables interrupts to occur at the end of a conversion. Global interrupts must also be enabled for the ADC interrupts to occur.

Parameters: None

Return Value: None

Side Effects: None

void ADC_IRQ_Disable(void)

Description: Disables end of conversion interrupts.

Parameters: None

Return Value: None

Side Effects: None

void ADC_SetEosMask(uint32 mask)

Description: Sets of clears the End of Scan (EOS) interrupt mask.

Parameters: mask: 1 to set the mask, 0 to clear the mask.

Return Value: None

Side Effects: All other bits in the INTR register are cleared by this function.

void ADC_SetChanMask(uint32 mask)

Description: Sets enable/disable mask for all channels.

Parameters: mask: 1 to set the mask, 0 to clear the mask.

Return Value: None

Side Effects: Enabling or disabling a channel disrupts the scheduled timing and changes the sample rate.

uint32 ADC_IsEndConversion(uint32 retMode)

Description: Immediately returns the status of the conversion or does not return (blocking) until the conversion completes, depending on the retMode parameter.

Parameters: retMode: Check conversion return mode. See the following table for options.

Options	Description
ADC_RETURN_STATUS	Immediately returns the conversion status for sequential channels. If the value returned is zero, the conversion is not complete, and this function should be retried until a nonzero result is returned.
ADC_WAIT_FOR_RESULT	Does not return a result until the ADC conversion of all sequential channels is complete.
ADC_RETURN_STATUS_INJ	Immediately returns the conversion status for the injection channel. If the value returned is zero, the conversion is not complete, and this function should be retried until a nonzero result is returned.
ADC_WAIT_FOR_RESULT_INJ	Does not return a result until the ADC completes injection channel conversion.

Return Value: uint8: If a nonzero value is returned, the last conversion is complete. If the returned value is zero, the ADC is still calculating the last result.

Side Effects: This function reads the end of conversion status, and clears it afterward.

int16 ADC_GetResult16(uint32 chan)

Description: Gets the data available in the channel result data register.

Parameters: chan: The ADC channel to read the result from. The first channel is 0 and the injection channel if enabled is the number of valid channels.

Return Value: Returns converted data as a signed 16-bit integer

Side Effects: None.

int16 ADC_GetResult32(uint32 chan)

Description: Gets the data available in the channel result data register.

Parameters: chan: The ADC channel to read the result from. The first channel is 0 and the injection channel if enabled is the number of valid channels.

Return Value: Returns converted data as a signed 32-bit integer

Side Effects: None.

void ADC_SetLowLimit(uint32 lowLimit)

Description: Sets the low limit parameter for a limit condition.

Parameters: lowLimit: The low limit for a limit condition.

Return Value: None

Side Effects: None

void ADC_SetHighLimit(uint32 highLimit)

Description: Sets the high limit parameter for a limit condition.

Parameters: highLimit: The high limit for a limit condition.

Return Value: None

Side Effects: None

void ADC_SetLimitMask(uint32 mask)

Description: Sets the channel limit condition mask.

Parameters: mask: Sets which channels that may cause a limit condition interrupt. Setting bits for channels that do not exist will have no effect. For example, if only 6 channels were enabled, setting a mask of 0x0103 would only enable the last two channels (0 and 1).

Return Value: None

Side Effects: None

void ADC_SetSatMask(uint32 mask)

Description: Sets the channel saturation event mask.

Parameters: mask: Sets which channels that may cause a saturation event interrupt. Setting bits for channels that do not exist will have no effect. For example, if only 8 channels were enabled, setting a mask of 0x01C0 would only enable two channels (6 and 7).

Return Value: None

Side Effects: None

void ADC_SetOffset(uint32 chan, int16 offset)

Description: Sets the ADC offset that is used by the functions ADC_CountsTo_uVolts, ADC_CountsTo_mVolts, and ADC_CountsTo_Volts.

Offset is applied to counts before unit scaling and gain. All CountsTo_[mV, uV, V]olts() functions use the following equation:

V = (Counts/AvgDivider - Offset)*TEN_VOLT/Gain

See CountsToVolts() for more about this formula.

To set channel 0's offset based on known V_offset_mV, use:

```
ADC_SetOffset(0uL, -1 * V_offset_mV * (1uL << (Resolution - 1)) / V_ref_mV);
```

Parameters: chan: ADC channel number.

offset: This value is a measured value when the inputs are shorted or connected to the same input voltage.

Return Value: None

Side Effects: None.

void ADC_SetGain(uint32 chan, int32 adcGain)

Description: Sets the ADC gain in counts per 10 volt for the voltage conversion functions below. This value is set by default by the reference and input range settings. Gain is applied after offset and unit scaling. All CountsTo_[mV, uV, V]olts() functions use the following equation:

V = (Counts/AvgDivider - Offset)*TEN_VOLT/Gain

See CountsToVolts() for more about this formula.

To set channel 0's gain based on known V_ref_mV, use:

```
ADC_SetGain(0uL, 10000 * (1uL << (Resolution - 1)) / V_ref_mV);
```

Parameters: chan: ADC channel number.

adcGain: ADC gain in counts per 10 volt.

Return Value: None

Side Effects: None.

float32 ADC_CountsTo_Volts(uint32 chan, int16 adcCounts)

Description: Converts the ADC output Volts as a float32. For example, if the ADC measured 0.534 volts, the return value would be 0.534.

The calculation of voltage depends on the contents of ADC_offset[], ADC_countsPer10Volt[], and other parameters. The equation used is:

V = (Counts/AvgDivider - Offset)*TEN_VOLT/Gain

-Counts = Raw Counts from SAR register

-AvgDivider = divider based on averaging mode

-Sequential, Sum: AvgDivider = number averaged

Note: The divider should be a maximum of 16. If using more averages, pre-scale Counts by (number averaged / 16)

-Interleaved, Sum: AvgDivider = number averaged

-Sequential, Fixed: AvgDivider = 1

-Offset = `$INSTANCE_NAME`_offset[]

-TEN_VOLT = 10V constant and unit scalar.

-Gain = `$INSTANCE_NAME`_countsPer10Volt[]

When the Vref is based on Vdda, the value used for Vdda is set for the project in the System tab of the DWR.

Parameters: chan: ADC channel number.

adcCounts: Result from the ADC conversion

Return Value: Result in Volts

Side Effects: None

int16 ADC_CountsTo_mVolts(uint32 chan, int16 adcCounts)

Description: Converts the ADC output to millivolts as an int16. For example, if the ADC measured 0.534 volts, the return value would be 534.

The calculation of voltage depends on the contents of ADC_offset[], ADC_countsPer10Volt[], and other parameters. The equation used is:

V = (Counts/AvgDivider - Offset)*TEN_VOLT/Gain

-Counts = Raw Counts from SAR register

-AvgDivider = divider based on averaging mode

-Sequential, Sum: AvgDivider = number averaged

Note: The divider should be a maximum of 16. If using more averages, pre-scale Counts by (number averaged / 16)

-Interleaved, Sum: AvgDivider = number averaged

-Sequential, Fixed: AvgDivider = 1

-Offset = `$INSTANCE_NAME`_offset[]

-TEN_VOLT = 10V constant and unit scalar.

-Gain = `$INSTANCE_NAME`_countsPer10Volt[]

When the Vref is based on Vdda, the value used for Vdda is set for the project in the System tab of the DWR.

Parameters: chan: ADC channel number.

adcCounts: Result from the ADC conversion.

Return Value: Result in mV.

Side Effects: None

int32 ADC_CountsTo_uVolts(uint32 chan, int16 adcCounts)

Description: Converts the ADC output to microvolts as an int32. For example, if the ADC measured 0.534 volts, the return value would be 534000.

The calculation of voltage depends on the contents of ADC_offset[], ADC_countsPer10Volt[], and other parameters. The equation used is:

V = (Counts/AvgDivider - Offset)*TEN_VOLT/Gain

-Counts = Raw Counts from SAR register

-AvgDivider = divider based on averaging mode

-Sequential, Sum: AvgDivider = number averaged

Note: The divider should be a maximum of 16. If using more averages, pre-scale Counts by (number averaged / 16)

-Interleaved, Sum: AvgDivider = number averaged

-Sequential, Fixed: AvgDivider = 1

-Offset = `$INSTANCE_NAME`_offset[]

-TEN_VOLT = 10V constant and unit scalar.

-Gain = `$INSTANCE_NAME`_countsPer10Volt[]

When the Vref is based on Vdda, the value used for Vdda is set for the project in the System tab of the DWR

Parameters: chan: ADC channel number.

adcCounts: Result from the ADC conversion

Return Value: Result in µV

Side Effects: None

void ADC_TrimFilterVos(void)

Description: Runs an algorithm to reduce voltage offset using the UAB's opamp trim.

Parameters: None

Return Value: None

Side Effects: None

void ADC_Sleep(void)

Description: This is the preferred routine to prepare the component for sleep. The ADC_Sleep() routine saves the current component state. Then it calls the ADC_Stop() function and calls ADC_SaveConfig() to save the hardware configuration.

Call the ADC_Sleep() function before calling the CySysPmDeepSleep() or the CySysPmHibernate() function. See the PSoC Creator *System Reference Guide* for more information about power-management functions.

Parameters: None

Return Value: None

Side Effects: If this function is called twice in the enable state of the component, the disabled state of the component will be stored. So ADC_Enable() and ADC_StartConvert() must be called after ADC_Wakeup() in this case.

void ADC_Wakeup(void)

Description: This is the preferred routine to restore the component to the state when ADC_Sleep() was called. The ADC_Wakeup() function calls the ADC_RestoreConfig() function to restore the configuration. If the component was enabled before the ADC_Sleep() function was called, the ADC_Wakeup() function also re-enables the component.

Parameters: None

Return Value: None

Side Effects: Calling this function without previously calling ADC_Sleep() may lead to unpredictable results.

Global Variables

Function	Description
ADC_initVar	The initVar variable is used to indicate initial configuration of this component. The variable is initialized to zero and set to 1 the first time ADC_Start() is called. This allows for component initialization without reinitialization in all subsequent calls to the ADC_Start() routine. If reinitialization of the component is required, then the ADC_Init() function can be called before the ADC_Start() or ADC_Enable() functions.
ADC_selected	The selected variable is used to keep state. It is set when a configuration is selected. It is tested during initialization to determine whether to run the single-configuration initializing code.
ADC_offset[]	This array calibrates the offset for each channel. The first time Start() is called, the offset array's entries are initialized to 0, except for channels which are Single-Ended, Signed, and have Vneg=Vref, for which it is set to -2^(Resolution-1)/Vref(mV). It can be modified using ADC_SetOffset(). The array is used by the ADC_CountsTo_Volts(), ADC_CountsTo_mVolts(), and ADC_CountsTo_uVolts() functions.
ADC_countsPer10Volt[]	This array is used to calibrate the gain for each channel. It is calculated the first time

Function	Description
	ADC_Start() is called. The value depends on channel resolution and voltage reference. It can be changed using ADC_SetGain(). This array affects the ADC_CountsTo_Volts(), ADC_CountsTo_mVolts(), and ADC_CountsTo_uVolts() functions by supplying the correct conversion between ADC counts and the applied input voltage.

Usable Constants

Function	Description
ADC_TOTAL_CHANNELS_NUM	This constant represents the amount of input channels available for scanning across all configs.

Sample Firmware Source Code

PSoC Creator provides numerous example projects that include schematics and example code in the Find Example Project dialog. For component-specific examples, open the dialog from the Component Catalog or an instance of the component in a schematic. For general examples, open the dialog from the Start Page or **File** menu. As needed, use the **Filter Options** in the dialog to narrow the list of projects available to select.

Refer to the "Find Example Project" topic in the PSoC Creator Help for more information.

Interrupt Service Routine

The Scanning SAR ADC contains a blank interrupt service routine in the file *ADC_INT.c*. The interrupt can be triggered at the End of Scan (EoS), by hitting a range condition or when the ADC result saturates. By default, the interrupt is triggered by the EoS source. The source can be changed through the ADC_SetEosMask, ADC_SetLimitMask, and ADC_SetSatMask functions.

You can place custom code in the designated areas to perform whatever function is required at the end of a conversion. A copy of the blank interrupt service routine is shown below. Place custom code between the "`/* `#START MAIN_ADC_ISR` */`" and "`/* `#END` */`" comments. This ensures that the code will be preserved, when a project is regenerated.

```
CY_ISR( ADC_1_ISR )
{
    uint32 intr_status;

    /* Rear interrupt status register */
    intr_status = ADC_1_SAR_INTR_REG;

    /*******************************************************************
    *  Custom Code
    *  - add user ISR code between the following #START and #END tags
    *******************************************************************/
    /* `#START MAIN_ADC_ISR`  */
```

```
        /* `#END`  */

        /* Clear handled interrupt */
        ADC_1_SAR_INTR_REG = intr_status;
    }
```

A second designated area is available to place variable definitions and constant definitions.

```
/* System variables */

/* `#START ADC_SYS_VAR` */
  /* Place user code here. */
/* `#END` */
```

An example of code that uses an interrupt to capture data follows.

```
#include <project.h>

int16 result = 0;
uint8 dataReady = 0;
int main()
{
      int16 newReading = 0;
      CyGlobalIntEnable; /* Enable Global interrupts */
      ADC_1_Start(); /* Initialize ADC */
      ADC_1_IRQ_Enable(); /* Enable ADC interrupts */
      ADC_1_StartConvert(); /* Start ADC conversions */
      for(;;)
      {
            if (dataReady != 0)
            {
                  dataReady = 0;
                  newReading = result;
                  /* More user code */
            }
      }

}
```

Note that you may use an alternative Interrupt service routine, located in your *main.c* file. In this case use the following template:

Implement interrupt service routine in *main.c*:

```
CY_ISR( ADC_ISR_LOC )
{
      uint32 intr_status;
      /* Read interrupt status register */
      intr_status = ADC_1_SAR_INTR_REG;
      /* Place your code here */
      /* Clear handled interrupt */
      ADC_1_SAR_INTR_REG = intr_status;
}
```

Enable ADC interrupt and set interrupt handler to local routine:

```
ADC_1_StartEx(ADC_ISR_LOC);
```

MISRA Compliance

This section describes the MISRA-C:2004 compliance and deviations for the component. There are two types of deviations defined:

- project deviations – deviations that are applicable for all PSoC Creator components
- specific deviations – deviations that are applicable only for this component

This section provides information on component-specific deviations. Project deviations are described in the MISRA Compliance section of the *System Reference Guide* along with information on the MISRA compliance verification environment.

The Scanning SAR ADC component has the following specific deviation:

MISRA-C: 2004 Rule	Rule Class (Required/ Advisory)	Rule Description	Description of Deviation(s)
8.7	R	Objects shall be defined at block scope if they are only accessed from within a single function.	The object 'ADC_channelsConfig' is always accessed from ADC_Init() function and, depending on component configuration, from ADC_CountsTo_mVolts(), ADC_CountsTo_uVolts, ADC() and ADC_CountsTo_Volts() functions. The intention of this publicly available static variable is to allow more efficient code.
3.1	R	All usage of implementation-defined behaviour shall be documented.	Embedded component, UABPRIM, source code has comments containing one of the characters '$', '@' or '".
19.7	A	A function should be used in preference to a function-like macro.	Embedded component, UABPRIM, source code uses function-like macros to take generic functions and rename them for specific use cases and use predefined parameters making the API easier to use. Also, there are read-modify-write macros that are in most UABPRIM API functions and are used to improve readability of the code so that the intent is clearly understood. The macros have proper parenthesis shielding of the parameters as well as the whole macro.

This component has the following embedded components: Interrupt, Clock. Refer to the corresponding component datasheet for information on their MISRA compliance and specific deviations.

API Memory Usage

The component memory usage varies significantly, depending on the compiler, device, number of APIs used, and component configuration. This table illustrates the memory usage for all APIs available in the default component configuration.

The measurements were done with the associated compiler configured in release mode with optimization set for size. For a specific design analyze the map file generated by the compiler to determine the memory usage.

Configuration	PSoC Analog Coprocessor	
	Flash Bytes	SRAM Bytes
Default, No CountsTo_Volts()	4560	24
Default, CountsTo_Volts()	6232	24
4 Config, No CountsTo_Volts()	4928	56
4 Config, CountsTo_Volts()	6600	56

Functional Description

The Scanning SAR ADC Component is implemented on a hardware block that contains the following elements:

- SAR ADC
  - SARMUX
  - SARADC core
  - SARREF
  - SARSEQ
- Switched-capacitor filter
  - CTB
  - UAB

SAR ADC

Block Diagram

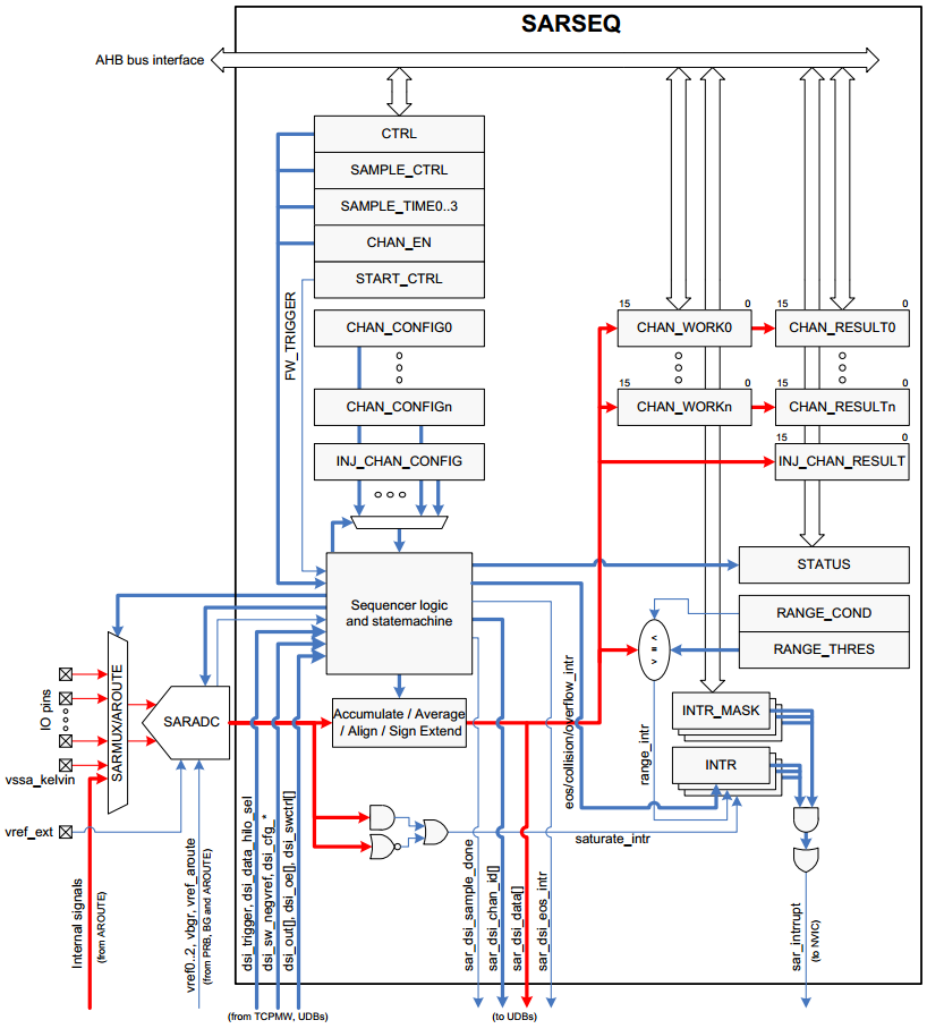

The SARADC core is a fast 12-bit ADC with SAR architecture. Preceding the SARADC is the SARMUX, which can route a combination of external pins and internal signals to inputs of the SARADC core. SARREF is a buffer used for multiple reference voltage selection. The SARSEQ sequencer block controls the SARMUX and the SARADC and does an automatic scan on all enabled channels as well as post-processing, such as averaging the output data.

Each channel has 16-bit conversion-result storage registers. At the end of the scan, a maskable interrupt is asserted. The sequencer also flags overflow and saturation errors that can be configured to assert an interrupt.

Switched-capacitor filter

Block Diagram

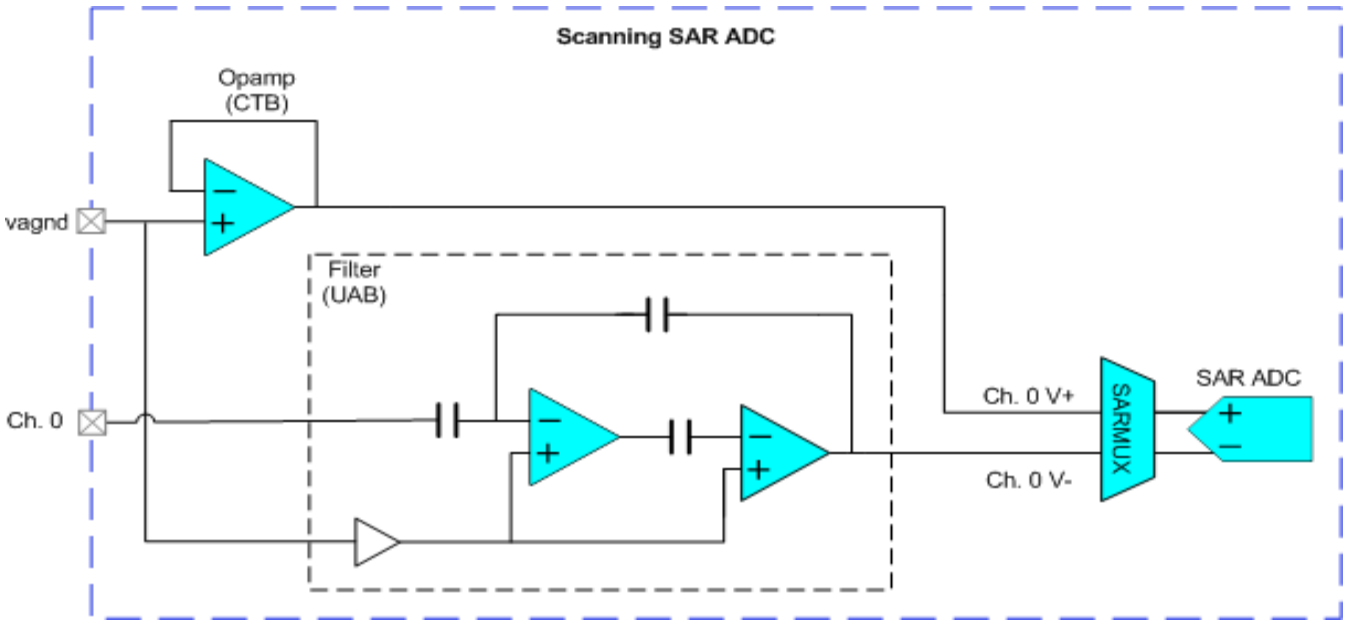

The switched-capacitor filter is an inverting 2nd-order filter. To protect the analog ground (vagnd terminal) signal from disturbances on the SARMUX, it is first buffered by a half-CTB's opamp set as a follower. Because the filter is inverting, vagnd is routed to the SAR's positive terminal, and the filter output is routed to the negative terminal. Filter measurements are therefore made with the correct polarity.

The filter operates in two phases, and the output is only valid during the first. To ensure the filter measurement is always correct, the customizer configures the SAR and UAB specifically to synchronize the two, based on the initial parameters. **Any change to timing, such as disabling channels at runtime, may cause the SAR sample to desynchronize from the UAB's valid output.**

Input Modes and Signedness

The input mode (S/E or Differential) determines the range of input voltages, and the signedness determines the digital codes to which the input range corresponds.

The smallest voltage in the range always corresponds to the lowest code.

The diagrams in this section show the various input ranges and their corresponding codes, represented in both 12-bit hexadecimal and decimal.

Note, it is recommended to use settings with intuitive results, such as S/E with Vneg = Vref and such as Signed Differential.

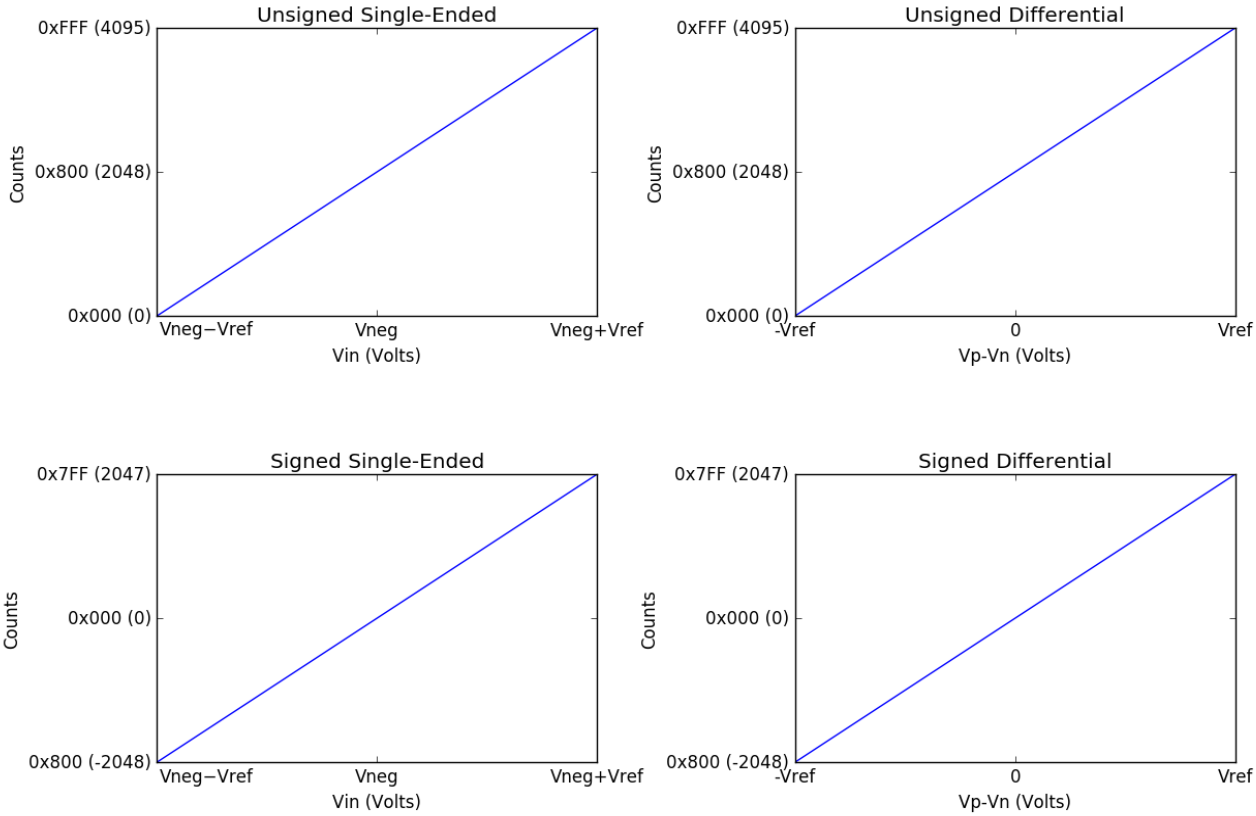

DMA Support

The DMA component can be used to transfer data from the component registers to RAM or another component.

Name of DMA Source	Width	Direction	DMA Req Signal	DMA Trigger Type	Description
(ADC_SAR_CHAN_RESULT_PTR + (***X*** << 2u)) * or ADC_SAR_CHAN***X***_RESULT_PTR *	32	Source	eoc	Pulse	Channel result data register. This 32-bit register contains 16-bit ADC results.

* where ***X*** – is a channel number. The first channel is 0.

Note The component has a DMA bus interface that supports 32-bit (word) transfers only. If the data element size used for DMA transfer is less than a word, set the DMA descriptor with the correct width; for example, data element size is halfword (2 bytes). The component register is used as Source; make sure the DMA descriptor is configured as "Word to Halfword."

Registers

Channel result data registers

This 32-bit register contains 16-bit ADC results from channel 0 along with 3 status bits that describe the results correctness.

ADC_SAR_CHAN_RESULT_REG

Bits	Name	Description
15:0	Data	SAR conversion result of the first channel. The data is copied here from the work field after all enabled channels in this scan have been sampled.
29	ADC_SATURATE_INTR_MIR	Mirror bit of corresponding bit in ADC_SAR_SATURATE_INTR_REG register
30	ADC_RANGE_INTR_MIR	Mirror bit of corresponding bit in ADC_SAR_RANGE_INTR_REG register
31	ADC_CHAN_RESULT_VALID_MIR	Mirror bit of corresponding bit in ADC_SAR_CHAN_RESULT_VALID_REG register

Result registers for the remaining channels are located sequentially in the memory. Direct defines for each channel are provided: ADC_SAR_CHAN*X*_RESULT_REG, were *X* is the channel number from 0 to 15.

Interrupt request registers

Each of the interrupts described in this section has an interrupt mask in the ADC_SAR_INTR_MASK_REG register. By making the interrupt mask low, the corresponding interrupt source is ignored. The SAR interrupt is raised any time the intersection (logic AND) of the interrupt flags in ADC_SAR_INTR_REG registers and the corresponding interrupt masks in ADC_SAR_INTR_MASK_REG register is non zero.

When servicing an interrupt, the interrupt service routine (ISR) clears the interrupt source by writing a ‘1’ to the interrupt bit after picking up the related data.

For firmware convenience, the intersection (logic AND) of the interrupt flags and the interrupt masks are also made available in the SADC_SAR_INTR_MASKED_REG register.

ADC_SAR_INTR_REG

Bits	Name	Description
0	ADC_EOS_MASK*	End Of Scan Interrupt: hardware sets this interrupt after completing a scan of all the enabled channels. Write with '1' to clear bit after picking up the data from the ADC_SAR_CHAN_RESULT_REG register.
1	ADC_OVERFLOW_MASK	Overflow Interrupt: hardware sets this interrupt when it sets a new ADC_EOS_MASK while that bit was not yet cleared by the firmware. Write with '1' to clear bit.
2	ADC_FW_COLLISION_MASK	Firmware Collision Interrupt: hardware sets this interrupt when in **Hardware trigger** sample mode firmware triggers the conversion using ADC_StartConvert() API while the SAR is BUSY. Raising this interrupt is delayed to when the scan caused by the ADC_StartConvert() API has been completed, i.e. not when the preceding scan with which this trigger collided is completed. When this interrupt is set it implies that the channels were sampled later than was intended (jitter). Write with '1' to clear bit.
3	ADC_DSI_COLLISION_MASK	DSI Collision Interrupt: hardware sets this interrupt when the hardware SOC trigger signal is asserted while the SAR is BUSY. Raising this interrupt is delayed to when the scan caused by the hardware SOC trigger has been completed, i.e. not when the preceding scan with which this trigger collided is completed. When this interrupt is set it implies that the channels were sampled later than was intended (jitter). Write with '1' to clear bit.

These bits are enabled by the component by default in ADC_SAR_INTR_MASK_REG register and generate an interrupt.

ADC_SAR_SATURATE_INTR_REG

Bits	Name	Description
15:0	SATURATE_INTR	Saturate interrupt request register. Hardware sets saturate interrupt for each channel if a conversion result (before averaging) of that channel is either 0x000 or 0xFFF (for 12-bit resolution), this is an indication that the ADC likely saturated. When a 10-bit or 8-bit resolution is selected for the channel, then the upper bits are ignored. Write with '1' to clear bit.

ADC_SAR_SATURATE_INTR_MASK_REG

Bits	Name	Description
15:0	SATURATE_MASK	Saturate interrupt mask register. It is set by default according to selection of the **Saturation** parameter. Use ADC_SetSatMask() API to change this mask register.

ADC_SAR_SATURATE_INTR_MASKED_REG

Bits	Name	Description
15:0	SATURATE_MASKED	Saturate interrupt masked request register. If the value is not zero then the SAR interrupt is raised. When read, this register reflects a bitwise AND between the saturate interrupt request and mask registers.

ADC_SAR_RANGE_INTR_REG

Bits	Name	Description
15:0	RANGE_INTR	Range detect interrupt request register. Hardware sets range detect interrupt for each channel if the conversion result (after averaging) of that channel met the condition specified by the **Compare Mode** parameter. Write with '1' to clear bit.

ADC_SAR_RANGE_INTR_MASK_REG

Bits	Name	Description
15:0	RANGE_MASK	Range detect interrupt mask register. It is set by default according to selection of the **Limit detect** parameter. Use ADC_SetLimitMask() API to change this mask register.

ADC_SAR_RANGE_INTR_MASKED_REG

Bits	Name	Description
15:0	RANGE_MASKED	Range interrupt masked request register. If the value is not zero then the SAR interrupt is raised. When read, this register reflects a bitwise AND between the range detect interrupt request and mask registers.

Resources

The Scanning SAR ADC is implemented as a fixed-function block. The component also uses one Interrupt.

DC and AC Electrical Characteristics

Specifications are valid for –40 °C ≤ T_A ≤ 85 °C and T_J ≤ 100 °C, except where noted. Specifications are valid for 1.71 V to 5.5 V, except where noted.

Note Final characterization data for PSoC Analog Coprocessor devices is not available at this time. Once the data is available, the component datasheet will be updated on the Cypress web site.

DC Specifications (filter not selected)

Parameter	Description	Min	Typ	Max	Units	Conditions
A_RES	Resolution	8	12	16	bits	Averaging used for > 12 bit resolution
A_CHNIS_S	Number of channels – single-ended or differential	8	–	16		Higher channel counts than minimum are routing resource dependent
A_MONO	Monotonicity	12	–	–	bits	Based on characterization
A_GAINERR	Gain error	–	–	+/-0.1	%	With external reference
A_OFFSET	Input offset voltage	–	–	2	mV	
A_ISAR	Current consumption		1		mA	
A_VIN	Input voltage range – single-ended or differential	V_{SS}	–	V_{DDA}	V	permissible range – conversion range depends on Vref value
A_SPAND	Input span - differential	$-V_{REF}$	–	$+V_{REF}$	V	for minimum to maximum code
A_INRES	Input path series resistance	–	–	2.2	kΩ	Based on characterization
A_INCAP	Input capacitance	–	–	10	pF	Based on characterization

DC Specifications (filter selected)

Parameter	Description	Min	Typ	Max	Units	Conditions
A_RES	Resolution	8	12	16	bits	Averaging used for > 12 bit resolution
A_CHNIS_S	Number of unfiltered channels – single-ended or differential	7	–	15		higher channel counts than minimum are routing resource dependent
A_CHNF_S	Number of filtered channels – single-ended	–	–	1		
A_MONO	Monotonicity	12	–	–	bits	Based on characterization
A_GAINERRF	Gain error of filtered channel	–	–	+/-2	%	With external reference, at DC, lowpass filter only
A_OFFSET	Input offset voltage	–	15	–	mV	For Vdda = 2.7 V to 3.6 V
A_ISAR	Current consumption	–	3.3	–	mA	
A_VIN	Input voltage range	V_{SS}+ 0.6	–	V_{DDA}- 0.6	V	permissible range – conversion range depends on Vref value
A_SPAND	Input span - differential	-V_{REF}	–	+V_{REF}	V	for minimum to maximum code
A_INRES	Input path series resistance	–	–	2.2	kΩ	Based on characterization
A_INCAP	Input capacitance	–	–	10	pF	Based on characterization

AC Specifications (filter not selected)

Parameter	Description	Min	Typ	Max	Units	Conditions
A_PSRR	Power supply rejection ratio	70	–	–	dB	Based on characterization
A_CMRR	Common mode rejection ratio	66	–	–	dB	Measured at 1 V
A_SAMP_1	Sample rate with external reference bypass cap	–	–	1	Msps	Aggregate over all channels, requires 36 MHz sys_clk to be available
A_SAMP_3	Sample rate with no bypass cap. Internal reference	–	–	83.3	ksps	Note: use of reference bypass cap is recommended in all systems
A_SNDR	Signal-to-noise and distortion ratio (SINAD)	65	–	–	dB	F_{IN} = 10 kHz, A_{IN} = -1 dB ref FS
A_INL	Integral non linearity	-1.7	–	2	LSB	V_{DD} = 1.71 to 5.5, 1 Msps, Vref = 1 to 5.5
A_INL	Integral non linearity	-1.5	–	1.7	LSB	V_{DDD} = 1.71 to 3.6, 1 Msps, Vref = 1.71 to V_{DDD}
A_DNL	Differential non linearity	-1	–	2.2	LSB	V_{DDD} = 1.71 to 5.5, 1 Msps, Vref = 1 to 5.5
A_DNL	Differential non linearity	-1	–	2	LSB	V_{DDD} = 1.71 to 3.6, 1 Msps, Vref = 1.71 to V_{DDD}
A_THD	Total harmonic distortion	–	–	-65	dB	F_{IN} = 10 kHz , A_{IN} = -1 dB ref FS

AC Specifications (filtered channel)

Parameter	Description	Min	Typ	Max	Units	Conditions
A_PSRR	Power supply rejection ratio	30	–	–	dB	Based on characterization
A_SNDR	Signal-to-noise and distortion ratio (SINAD)	–	55	–	dB	F_{IN} = 10 kHz, A_{IN} = -1 dB ref FS, lowpass, OSR=10
A_THD	Total harmonic distortion	–	55	–	dB	F_{IN} = 10 kHz , A_{IN} = -1 dB ref FS, lowpass, OSR=10

Block Specs

Parameter	Description	Min	Typ	Max	Units	Conditions
VREFSAR	Trimmed internal reference to SAR	-1	–	+1	%	Percentage of Vbg (1.2 V).

Component Errata

This section lists known problems with the Scanning SAR ADC component.

Cypress ID	Component Version	Problem	Workaround
254437	All	If SYSCLK is divided from HFCLK, the filter will not function as expected.	Do not use a SYSCLK divider value other than “1” in the Configure System Clocks -> High Frequency Clocks tab.

Component Changes

This section lists the major changes in the component from the previous version.

Version	Description of Changes	Reason for Changes / Impact
1.20.a	Edited datasheet.	Added errata item 254437 to document SYSCLK filter issue. Corrected wording on "Achieved" label description. Added picture of symbol with differential and single-ended channels. Added description of the triggers for the ISR.
1.20	Component can be configured with up to four configurations. DC and AC Electrical Characteristics updated. Appendix A describes some filter scheduling use cases.	Add dynamic reconfiguration. Component now characterized.
1.10	Added optional switched-capacitor filter to channel zero.	This feature provides additional signal processing before the ADC measurement.
1.0	Initial version of the component.	Final characterization data for PSoC Analog Coprocessor devices is not available at this time. Once the data is available, the component datasheet will be updated on the Cypress web site.

Appendix A – Debugging Filter Scheduling Errors

There are some constraints on the filter's sample rate that may make some filters unachievable.

$f_s \leq 2MHz$	Sampling rate must be less than the hardware limit of the UAB
$f_s \geq f_{char} \times 4$	Sampling rate must be greater than four times the characteristic frequency.
$f_s \geq f_{notch_lp} \times 2$	For low pass filters, sampling rate must be greater than double the notch.
$\frac{T_{scan}}{T_s} = N$	The scan duration (T_{scan}) must be an integer multiple of the filter period (T_s).
$\frac{f_{HFCLK}}{2f_s} = M$	The HFCLK must be an integer multiple of double the sampling frequency.

f_s is the filter's sampling frequency.

f_{char} is the filter's characteristic frequency, which is defined per filter, as follows:

- f_{char_lp} is the low pass -3dB point
- f_{char_hp} is the high pass -3dB point
- f_{char_bp} is the band pass upper -3dB point
- f_{char_bs} is the notch upper -3dB point. If the lower -3dB point was specified, this number is calculated internally by the equation $f_{upper3dB} = f_{notch}^2 / f_{lower3dB}$

f_{notch_lp} is a low pass filter's notch frequency

T_{scan} is the ADC's scan duration, including sampling, conversion, and averaging.

T_s is the filter's sampling period. $T_s = 1/f_s$.

f_{HFCLK} is the frequency of the design's high frequency clock (HFCLK).

The component first considers the desired sample rate and channel acquisition times, and chooses a SAR clock, which sets T_{scan}. It then attempts to choose a suitable f_s which conforms to the above constraints. If f_s is over-constrained, the customizer will report one or more errors.

Generally, the easiest way to relieve a scheduling error is to choose a different characteristic frequency. In the cases where this is not appropriate, try adjusting the T_{scan} by varying desired

sample rate, numbers of channels, and channel acquisition times. T_{scan} can also be manipulated by using an external clock source. Adjusting the frequency of the HFCLK in the Creator Design Wide Resources will impact both T_{scan} and valid options for f_s.

© Cypress Semiconductor Corporation, 2016. This document is the property of Cypress Semiconductor Corporation and its subsidiaries, including Spansion LLC ("Cypress"). This document, including any software or firmware included or referenced in this document ("Software"), is owned by Cypress under the intellectual property laws and treaties of the United States and other countries worldwide. Cypress reserves all rights under such laws and treaties and does not, except as specifically stated in this paragraph, grant any license under its patents, copyrights, trademarks, or other intellectual property rights. If the Software is not accompanied by a license agreement and you do not otherwise have a written agreement with Cypress governing the use of the Software, then Cypress hereby grants you a personal, non-exclusive, nontransferable license (without the right to sublicense) (1) under its copyright rights in the Software (a) for Software provided in source code form, to modify and reproduce the Software solely for use with Cypress hardware products, only internally within your organization, and (b) to distribute the Software in binary code form externally to end users (either directly or indirectly through resellers and distributors), solely for use on Cypress hardware product units, and (2) under those claims of Cypress's patents that are infringed by the Software (as provided by Cypress, unmodified) to make, use, distribute, and import the Software solely for use with Cypress hardware products. Any other use, reproduction, modification, translation, or compilation of the Software is prohibited.

TO THE EXTENT PERMITTED BY APPLICABLE LAW, CYPRESS MAKES NO WARRANTY OF ANY KIND, EXPRESS OR IMPLIED, WITH REGARD TO THIS DOCUMENT OR ANY SOFTWARE OR ACCOMPANYING HARDWARE, INCLUDING, BUT NOT LIMITED TO, THE IMPLIED WARRANTIES OF MERCHANTABILITY AND FITNESS FOR A PARTICULAR PURPOSE. To the extent permitted by applicable law, Cypress reserves the right to make changes to this document without further notice. Cypress does not assume any liability arising out of the application or use of any product or circuit described in this document. Any information provided in this document, including any sample design information or programming code, is provided only for reference purposes. It is the responsibility of the user of this document to properly design, program, and test the functionality and safety of any application made of this information and any resulting product. Cypress products are not designed, intended, or authorized for use as critical components in systems designed or intended for the operation of weapons, weapons systems, nuclear installations, life-support devices or systems, other medical devices or systems (including resuscitation equipment and surgical implants), pollution control or hazardous substances management, or other uses where the failure of the device or system could cause personal injury, death, or property damage ("Unintended Uses"). A critical component is any component of a device or system whose failure to perform can be reasonably expected to cause the failure of the device or system, or to affect its safety or effectiveness. Cypress is not liable, in whole or in part, and you shall and hereby do release Cypress from any claim, damage, or other liability arising from or related to all Unintended Uses of Cypress products. You shall indemnify and hold Cypress harmless from and against all claims, costs, damages, and other liabilities, including claims for personal injury or death, arising from or related to any Unintended Uses of Cypress products.

Cypress, the Cypress logo, Spansion, the Spansion logo, and combinations thereof, PSoC, CapSense, EZ-USB, F-RAM, and Traveo are trademarks or registered trademarks of Cypress in the United States and other countries. For a more complete list of Cypress trademarks, visit cypress.com. Other names and brands may be claimed as property of their respective owners.