LED Datasheet LED V 2.00

Copyright © 2005-2014 Cypress Semiconductor Corporation. All Rights Reserved.

Resources	PSoC® Blocks			API Memory (Bytes)		Pins (per External I/O)
	Digital	Analog CT	Analog SC	Flash	RAM	
All PSoC Devices	0	0	0	40	1	1

Features and Overview

- Support for both Active High and Active Low circuits
- Works with system shadow registers
- Functions (Switch, Invert, and GetState)

The LED User Module is just a few functions to control an LED or any simple device that is controlled by On and Off.

Figure 1. LED Block Diagram

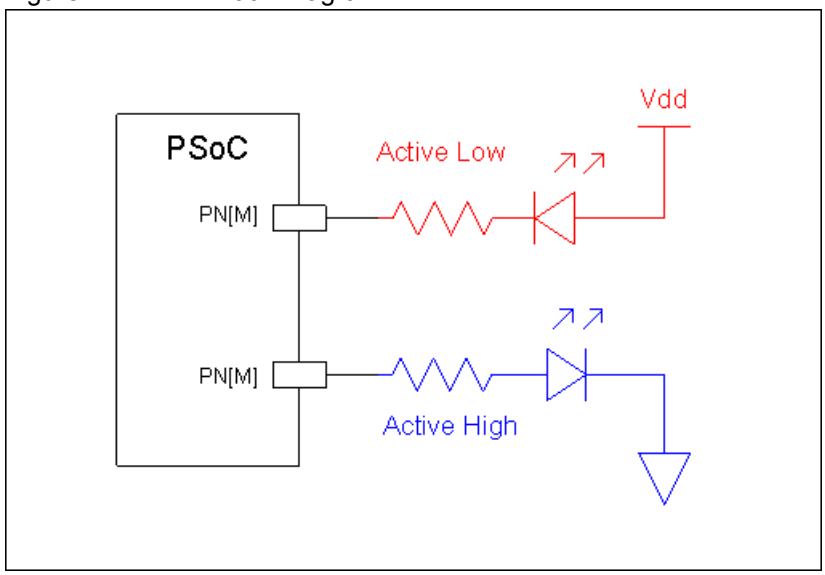

Functional Description

The LED User Module is a convenient way to turn a pin on and off without having to think about shadow registers.

The project using the LED User Module which manipulates pins on a port shared with an instance of the LED User Module must avoid direct PRTxDR writes. The Shadow Registers should be used for such manipulation to prevent incorrect LED User Module operation.

Placement

The LED can be placed at any I/O pin. The Drive Mode of selected pin is automatically set to the Strong value.

Parameters and Resources

Port

Select the port where the LED will be connected.

Pin

Select pin where the LED will be connected.

Drive

The LED User Module may be configured to drive either an “Active High" or “Active Low" configuration. In an Active High configuration, the LED’s anode is connected to the PSoC pin through a resistor and the LED’s cathode is connected to Vss. In an Active Low configuration, the LED’s cathode is connected to the PSoC pin through a resistor and the LED’s anode is connected to Vcc.

Application Programming Interface

The Application Programming Interface (API) routines are provided as part of the user module to allow the designer to deal with the module at a higher level. This section specifies the interface to each function together with related constants provided by the “include" files.

Note

In this, as in all user module APIs, the values of the A and X register may be altered by calling an API function. It is the responsibility of the calling function to preserve the values of A and X before the call if those values are required after the call. This “registers are volatile" policy was selected for efficiency reasons and has been in force since version 1.0 of PSoC Designer. The C compiler automatically takes care of this requirement. Assembly language programmers must ensure their code observes the policy, too. Though some user module API function may leave A and X unchanged, there is no guarantee they may do so in the future.

For Large Memory Model devices, it is also the caller's responsibility to preserve any value in the CUR_PP, IDX_PP, MVR_PP, and MVW_PP registers. Even though some of these registers may not be modified now, there is no guarantee that will remain the case in future releases.

Here are the API programming routines provided for the LED User Module:

LED_Start, LED_Stop

Description:

Both these functions do the same thing; turn off the LED.

C Prototype:

```
void  LED_Start(void)
void  LED_Stop(void)
```

Assembler:

```
lcall  LED_Start
lcall  LED_Stop
```

Return Value:

None

Side Effects:

None

LED_Switch

Description:

Turns LED on or off.

C Prototype:

```
void  LED_Switch(BYTE bOnOff)
```

Assembler:

```
Mov  a,0x01    ; Turn on LED
lcall   LED_Switch
```

Parameters:

bOnOff: 0 = Off, Non-Zero = On

Return Values:

None

Side Effects:

None

LED_On

Description:

Turns LED on.

C Prototype:

```
void  LED_On(void)
```

Assembler:

```
lcall   LED_On
```

Parameters:

None

Return Values:

None

Side Effects:

None

LED_Off

Description:

Turns LED off.

C Prototype:

```
void  LED_Off(void)
```

Assembler:

```
lcall   LED_Off
```

Parameters:

None

Return Values:

None

Side Effects:

None

LED_Invert

Description:

Inverts the state of the LED. If the LED was on, it will be turned off; if it was off, it will be turned on.

C Prototype:

```
void  LED_Invert(void)
```

Assembler:

```
lcall  LED_Invert
```

Parameters:

None

Return Values:

None

Side Effects:

None

LED_GetState

Description:

Returns state of LED.

C Prototype:

```
BYTE  LED_GetState(void)
```

Assembler:

```
lcall  LED_GetState
mov   [myLED_State],A  ; Place result in location myLED_State
```

Parameters:

None

Return Value:

Returns state of LED. A zero is returned if LED if off. A 1 is returned if the LED is on. Below are some symbolic names available in both C and ASM.

Symbolic Name	Value
LED_ON	1
LED_OFF	0

Side Effects:

None

Sample Firmware Source Code

Here is a sample project written in assembly code:

```
;;; Sample ASM Code for the LED User Module
;;;
;;; Turn off LED at start up then turn it on, WOW!
;;;

include "m8c.inc"       ; part specific constants and macros
include "PSoCAPI.inc"   ; PSoC API definitions for all User Modules

area text(ROM,REL)
export _main

_main:

   mov  a,0x00          ; Turn Off LED
   call  LED_Switch
                        ; Do user stuff
   mov  A,0x01          ; Turn On LED
   call  LED_Switch
```

Here is a sample project written in C:

```
//-------------------------------------------------------
//  Sample C Code for the LED
//  Turn LED off then, then stay in a loop and invert
//  its state.
//
//
//-------------------------------------------------------------------------
#include <m8c.h>          // part specific constants and macros
#include "PSoCAPI.h"      // PSoC API definitions for all User

void main(void)
{
   LED_Start();

   LED_Switch(1);         // Turn on LED

   while(1) {
      LED_Invert();       // Flash LED
}
}
```

Configuration Registers

None

Version History

Version	Originator	Description
1.2	DHA	Added Version History.
1.3	DHA	Enhanced pin selection to exclude used pins.
1.40	DHA	Added DRC warning message. This message appears when several LED User Modules use the same pin.

Note PSoC Designer 5.1 introduces a Version History in all user module datasheets. This section documents high level descriptions of the differences between the current and previous user module versions.

Copyright © 2005-2014 Cypress Semiconductor Corporation. The information contained herein is subject to change without notice. Cypress Semiconductor Corporation assumes no responsibility for the use of any circuitry other than circuitry embodied in a Cypress product. Nor does it convey or imply any license under patent or other rights. Cypress products are not warranted nor intended to be used for medical, life support, life saving, critical control or safety applications, unless pursuant to an express written agreement with Cypress. Furthermore, Cypress does not authorize its products for use as critical components in life-support systems where a malfunction or failure may reasonably be expected to result in significant injury to the user. The inclusion of Cypress products in life-support systems application implies that the manufacturer assumes all risk of such use and in doing so indemnifies Cypress against all charges.

PSoC Designer™ and Programmable System-on-Chip™ are trademarks and PSoC® is a registered trademark of Cypress Semiconductor Corp. All other trademarks or registered trademarks referenced herein are property of the respective corporations.

Any Source Code (software and/or firmware) is owned by Cypress Semiconductor Corporation (Cypress) and is protected by and subject to worldwide patent protection (United States and foreign), United States copyright laws and international treaty provisions. Cypress hereby grants to licensee a personal, non-exclusive, non-transferable license to copy, use, modify, create derivative works of, and compile the Cypress Source Code and derivative works for the sole purpose of creating custom software and or firmware in support of licensee product to be used only in conjunction with a Cypress integrated circuit as specified in the applicable agreement. Any reproduction, modification, translation, compilation, or representation of this Source Code except as specified above is prohibited without the express written permission of Cypress.

Disclaimer: CYPRESS MAKES NO WARRANTY OF ANY KIND, EXPRESS OR IMPLIED, WITH REGARD TO THIS MATERIAL, INCLUDING, BUT NOT LIMITED TO, THE IMPLIED WARRANTIES OF MERCHANTABILITY AND FITNESS FOR A PARTICULAR PURPOSE. Cypress reserves the right to make changes without further notice to the materials described herein. Cypress does not assume any liability arising out of the application or use of any product or circuit described herein. Cypress does not authorize its products for use as critical components in life-support systems where a malfunction or failure may reasonably be expected to result in significant injury to the user. The inclusion of Cypress' product in a life-support systems application implies that the manufacturer assumes all risk of such use and in doing so indemnifies Cypress against all charges.

Use may be limited by and subject to the applicable Cypress software license agreement.