

Infineon Automotive Smart Power Stages: An Overview

Harshith Alvakonda

restricted

Agenda

- Applications of power stages
- Introduction to power stage
- Key features and value proposition of Infineon’s Power stages
- TLF12505A Power Stage Evaluation Board (EVK)
- Demonstrate closed loop solution using TLF12505A EVK

Copyright © Infineon Technologies AG 2023. All rights reserved.

Applications

- **Advanced Driver Assistance System (ADAS)**
  - Power stages provide high-efficiency, low-noise power to complex sensor suites and processors
- **Autonomous Driving (AD)**
  - High-level autonomy necessitates redundant by-wire power stages
- **Humanoid Robots**
  - Power stages serve as humanoid muscles, turning battery energy into bipedal stability
- **Autonomous Mobile Robots (AMRs)**
  - Logistics, manufacturing rely on power stages for continuous, 24/7 operation and material handling
- **High-Performance Computing (HPC) and Data Centers**
  - Specialized MOSFET power stages meets modern data center power density requirements

Copyright © Infineon Technologies AG 2026. All rights reserved.

What is a power stage



- These devices integrate MOSFETs, gate drivers, and sensing mechanisms to provide efficient and reliable power conversion

- Infineon’s OPTIREG™ family of multiphase power delivery solutions

Copyright © Infineon Technologies AG 2026. All rights reserved.

Buck converter

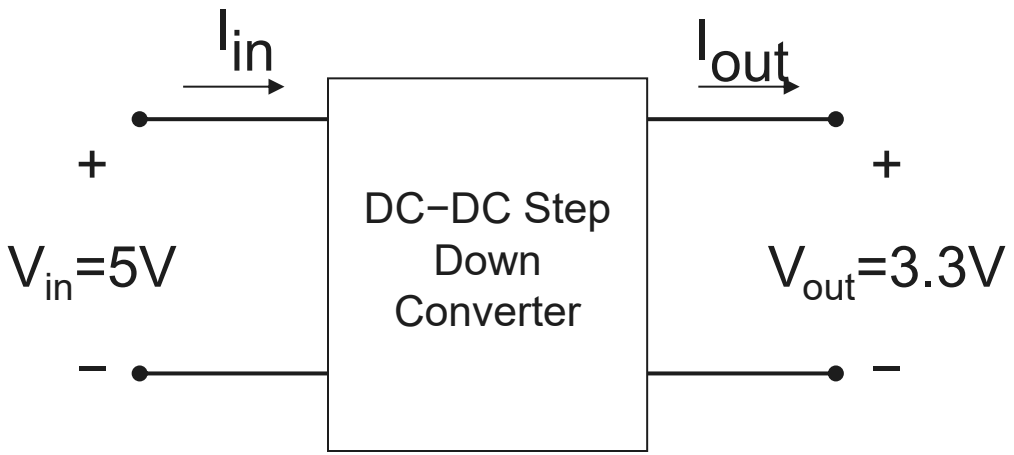

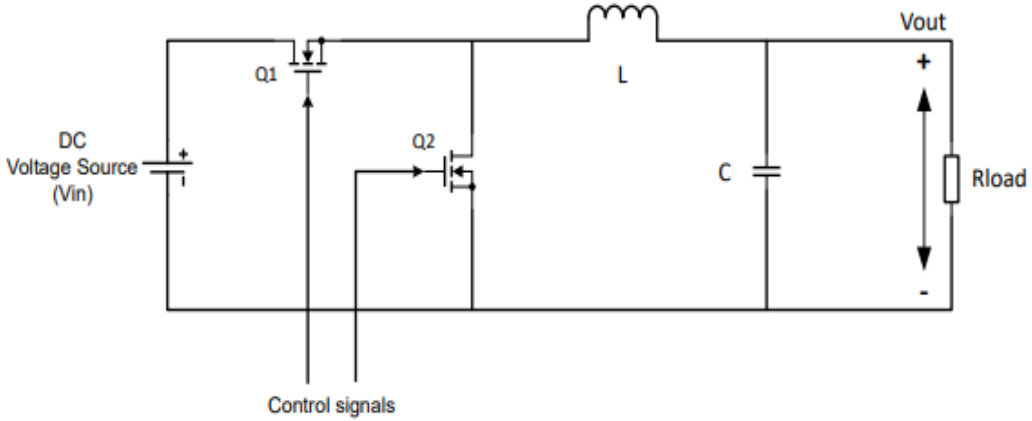

- Buck converter is used to step down the input voltage to any desired output voltage.
- Buck converter is preferred choice due to its high efficiency and better thermal management in switch mode power supply designs .

Copyright © Infineon Technologies AG 2023. All rights reserved.

Inductor working principle

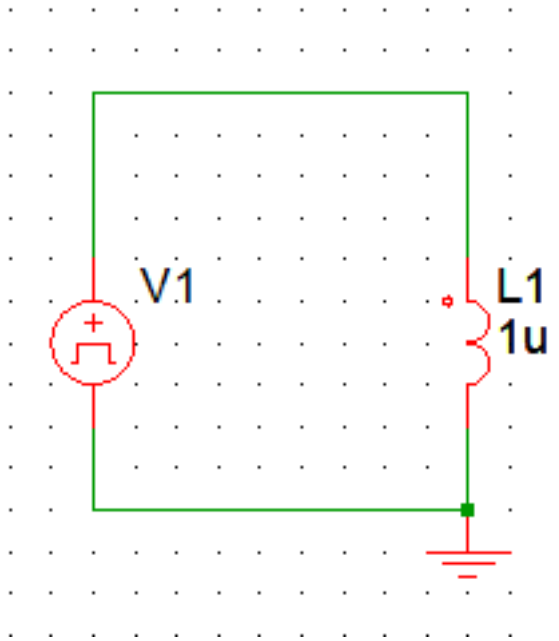



- $V = L\frac{di}{dt}$
- $i = \frac{V}{L} * t = m * t$

- The inductor charges when a postive voltage is applied across its terminal.
- The inductor dischareges when a negative voltage is applied across its terminal.

Copyright © Infineon Technologies AG 2023. All rights reserved.

Buck Converter Principle

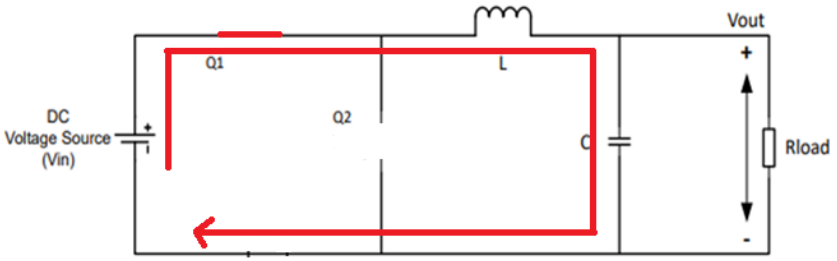

› Voltage across inductor- (Vin-Vout). As Vin>Vout, inductor current has +ve slope

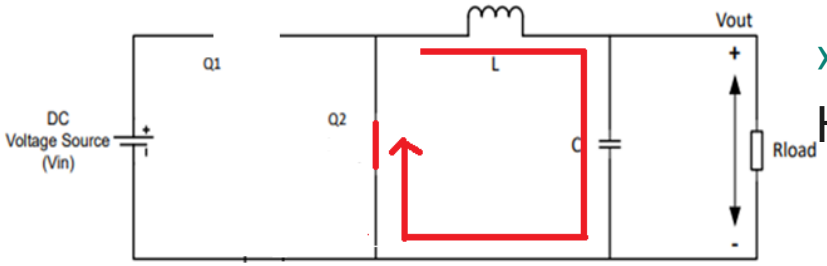

› Voltage across inductor- (-Vout). –ve voltage is applied across inductor Hence –ve slope

› Average inductor current = load current

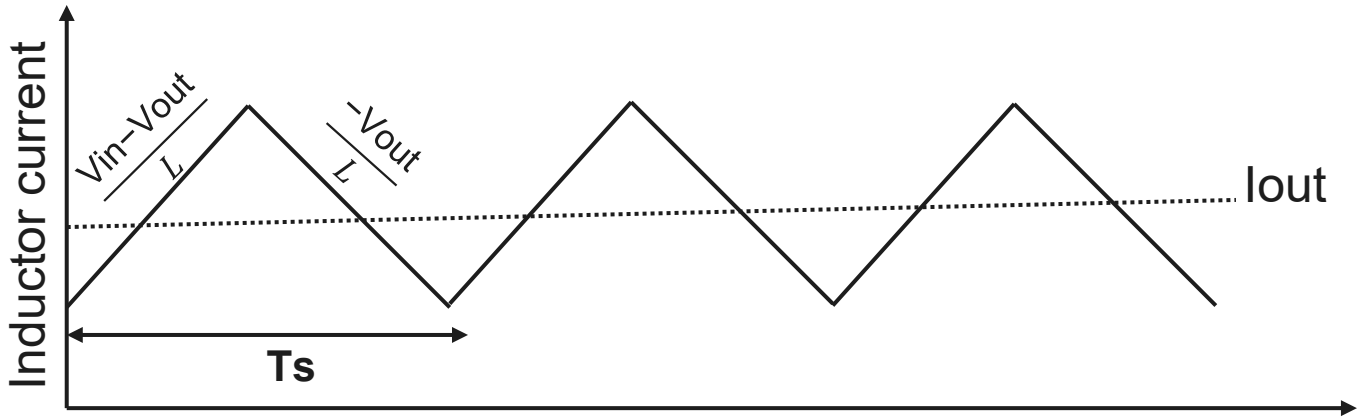

Copyright © Infineon Technologies AG 2023. All rights reserved.

Duty Cycle

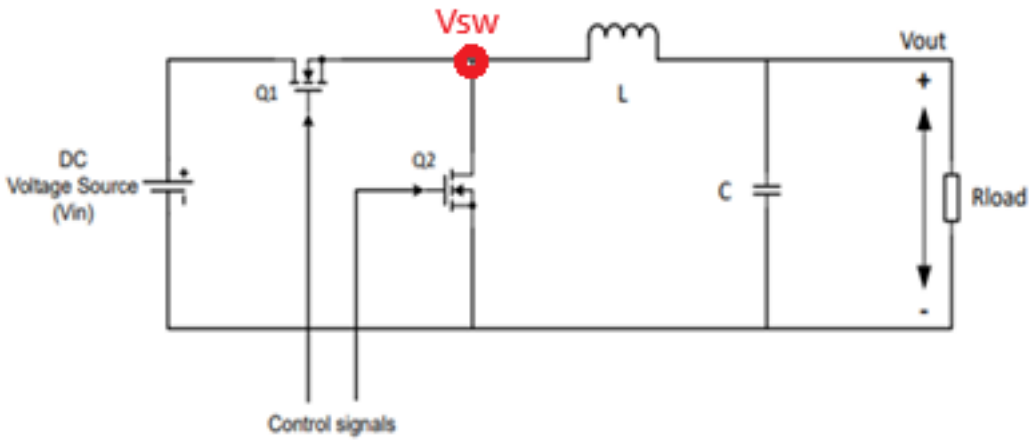

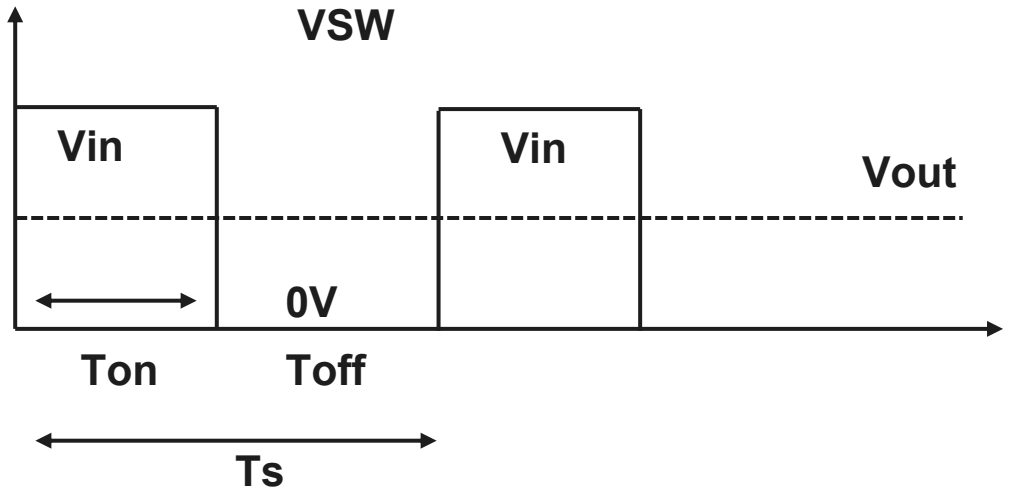

› The duration of the high side FET(Ton) conduction depends on the input and output voltage specification.

$$V_{out} = \frac{V_{in} * T_{on}}{T_s} \Rightarrow T_{on} = \frac{V_{out} * T_s}{V_{in}}$$

› If the Ton is expressed as a fraction of switching period Ton = D* Ts

$$D = \frac{V_{out}}{V_{in}} \qquad 0 < D < 1$$

Copyright © Infineon Technologies AG 2023. All rights reserved.

Converter loss

- High loss contribution in SMPS are
  - Switching loss
  - Conduction loss
  - Inductor Core loss
  - Gate Charge loss
- As the load current increases the conduction dominates the rest of the losses
  - For E.g. HS FET conduction loss Pc ≈ $I_{out}^2 * R_{DSON} * D$

    Pc ∝ I_{out}^2
- A significant increase in converter loss is observed at high current.
- Hence a single buck converter is not recommended for high current applications

Copyright © Infineon Technologies AG 2023. All rights reserved.

Multiphase Buck Converter

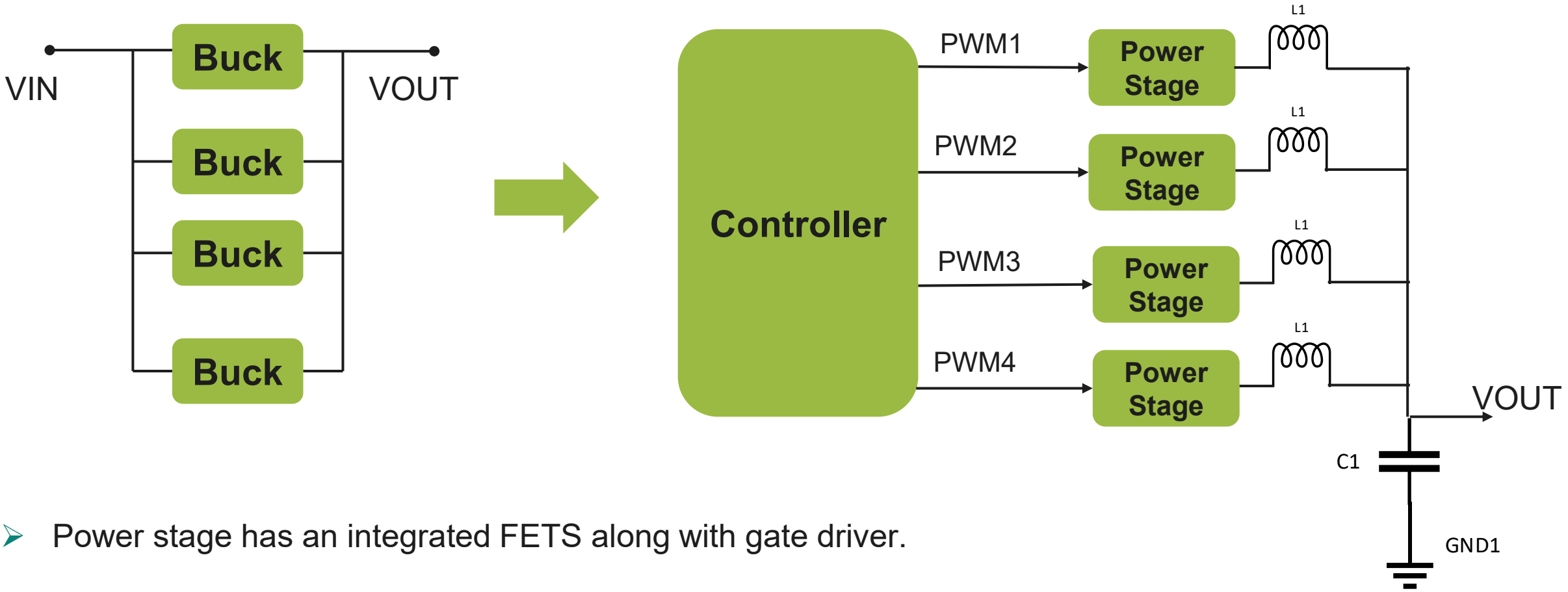

- Power stage has an integrated FETS along with gate driver.
- Controller controls the Duty cycle of the each power stage to regulate the output voltage.

Copyright © Infineon Technologies AG 2023. All rights reserved.

Multiphase Buck converter

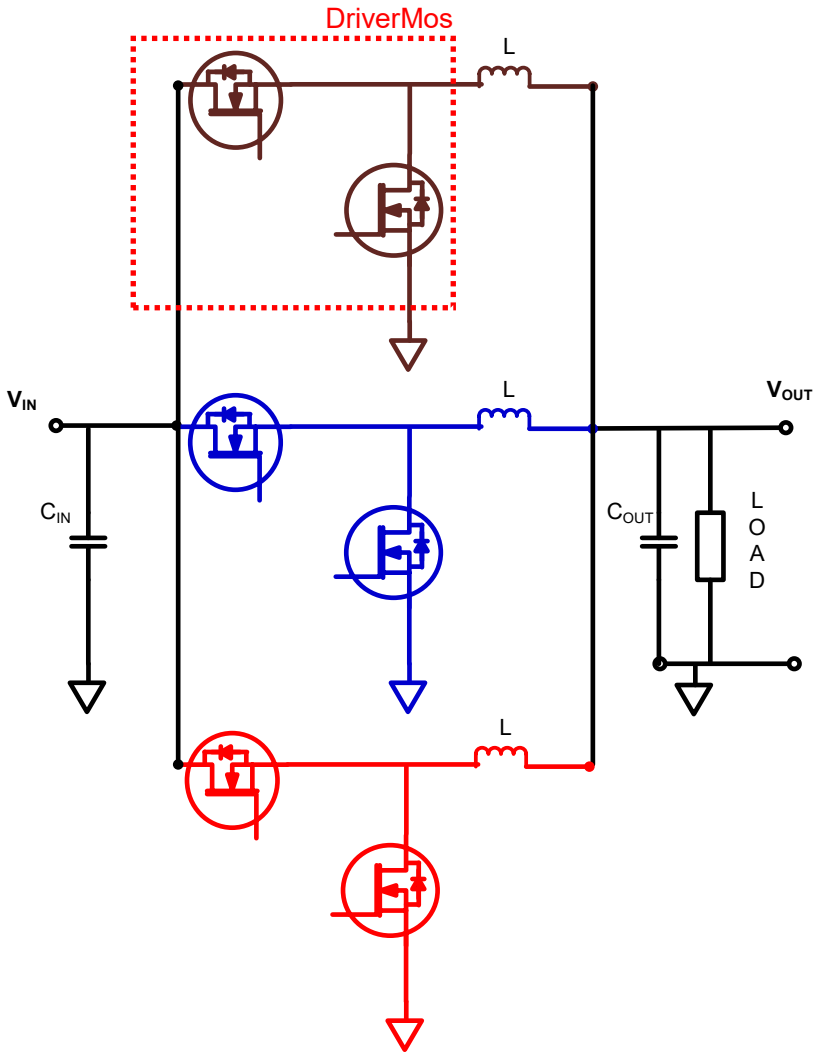

- 2 Phase system, Phase offset is 180 Deg

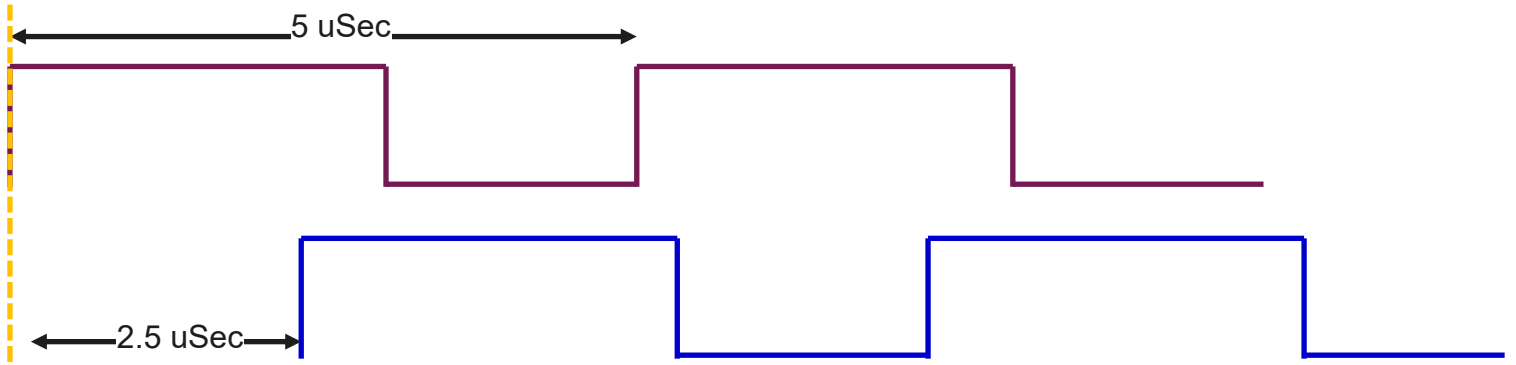

- 3 Phase system, Phase offset is 120 Deg

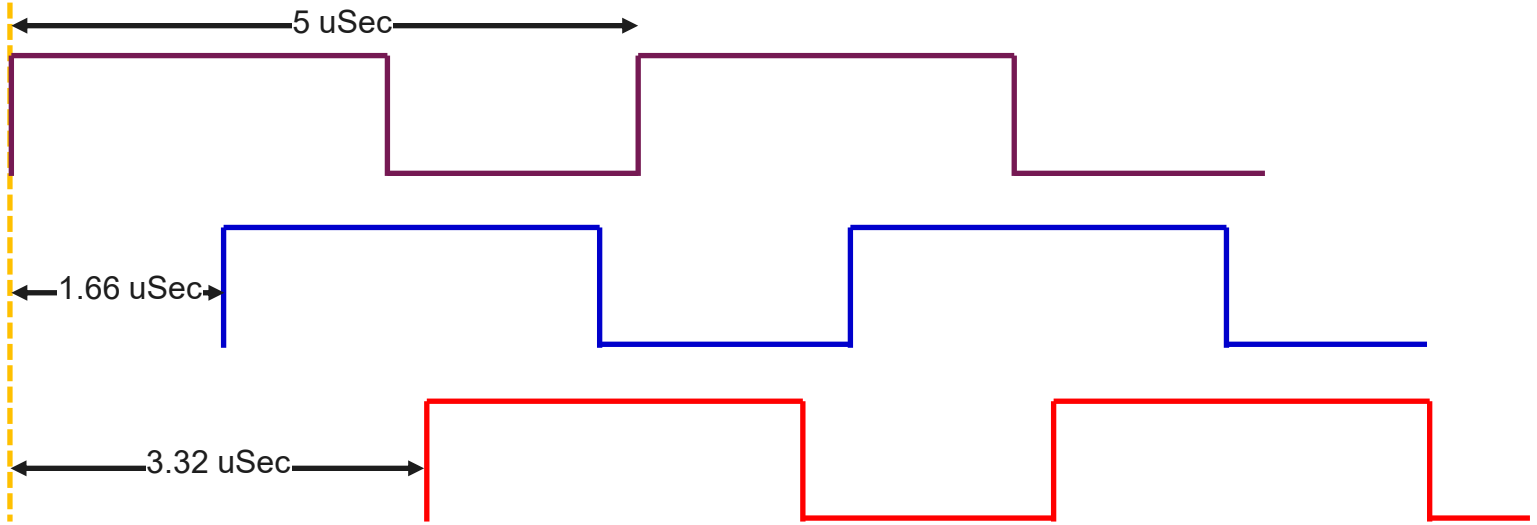

Copyright © Infineon Technologies AG 2026. All rights reserved.

Advantages of Multiphase converters

In multiphase converters the switching frequency of the buck converter is effectively multiplied by the number of phases used

- Improving transient response during load transients
- **reduced input capacitor RMS currents and input capacitance**
- **reduced output capacitor RMS currents and output capacitance**
- reduced EMI filtering requirements
- Improved thermal performance and efficiency at high load currents
- lower profile and decreased PCB real estate solution size
- improved reliability and power stage redundancy
- Easier power train component selection and its availability

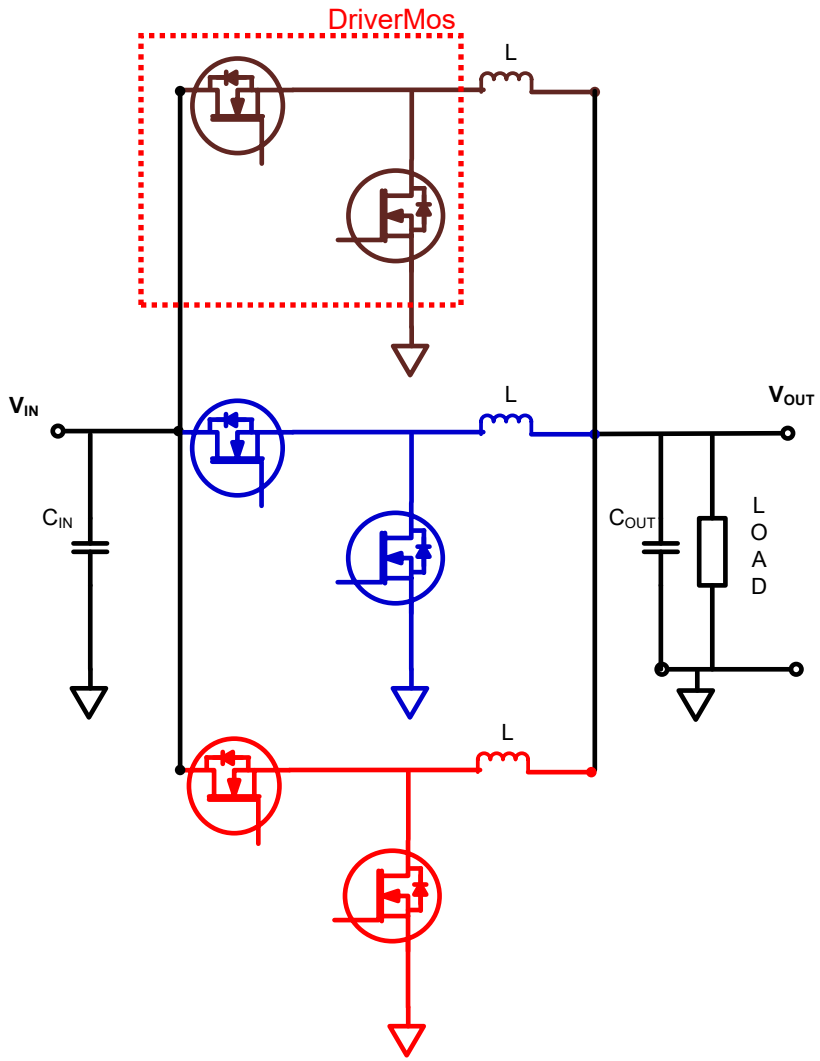

Copyright © Infineon Technologies AG 2026. All rights reserved.

Input Capacitor RMS Current

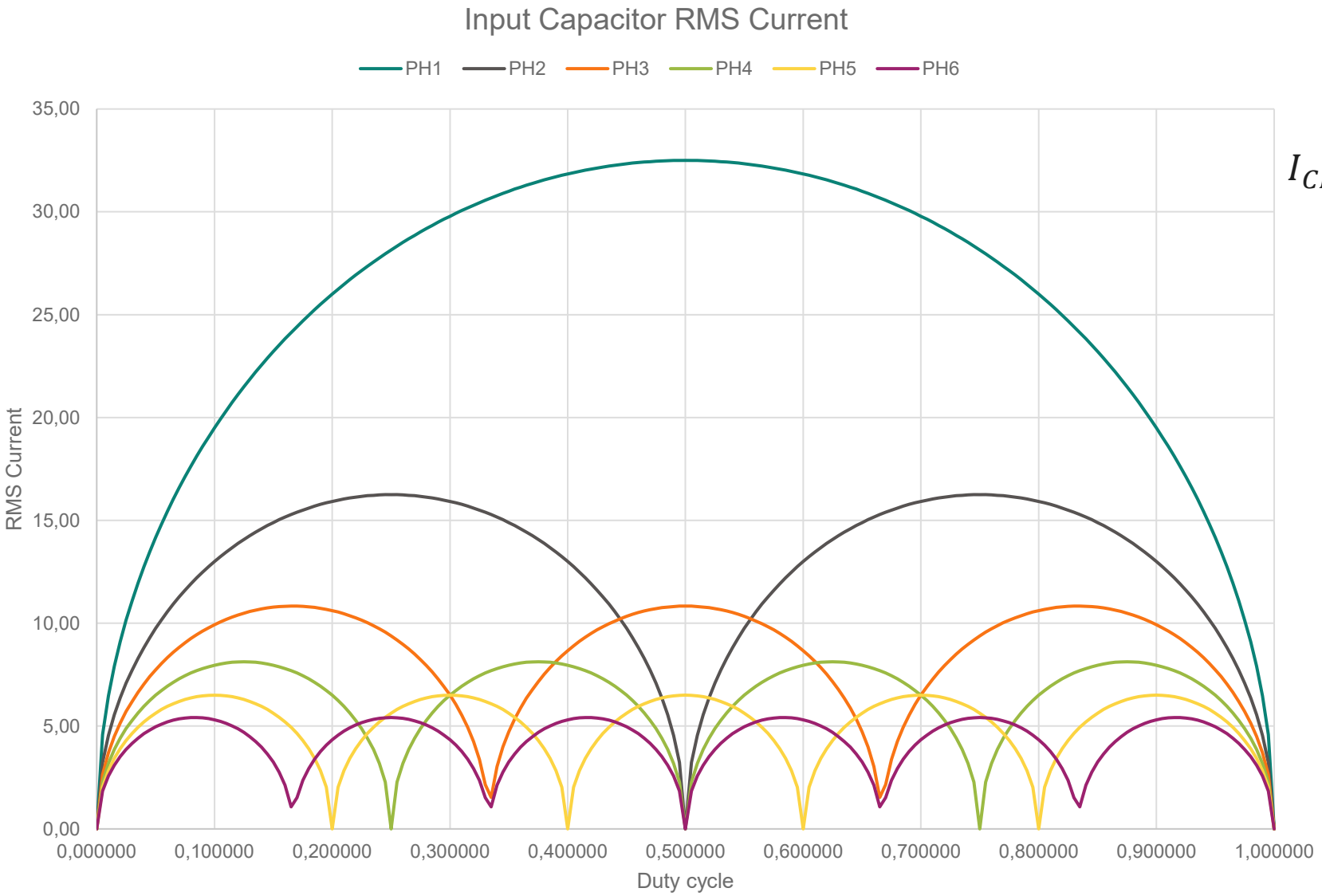

$$I_{CIP(RMS)} = I_{OUT}\sqrt{\left(D - \frac{M}{N_{PH}}\right) * \left(\frac{1+M}{N_{PH}} - D\right)}$$

Where,

- D = V_{OUT} / V_{IN}
- N_{PH} = No of Phases
- M = floor (N_{PH} * D)

Example,

- VIN : 12.0 V
- VOUT : 0.75 V
- IOUT : 65.0 A
- L : 85nH
- ΔI_L : 15.0 A

Copyright © Infineon Technologies AG 2026. All rights reserved.

Output Capacitor RMS Current

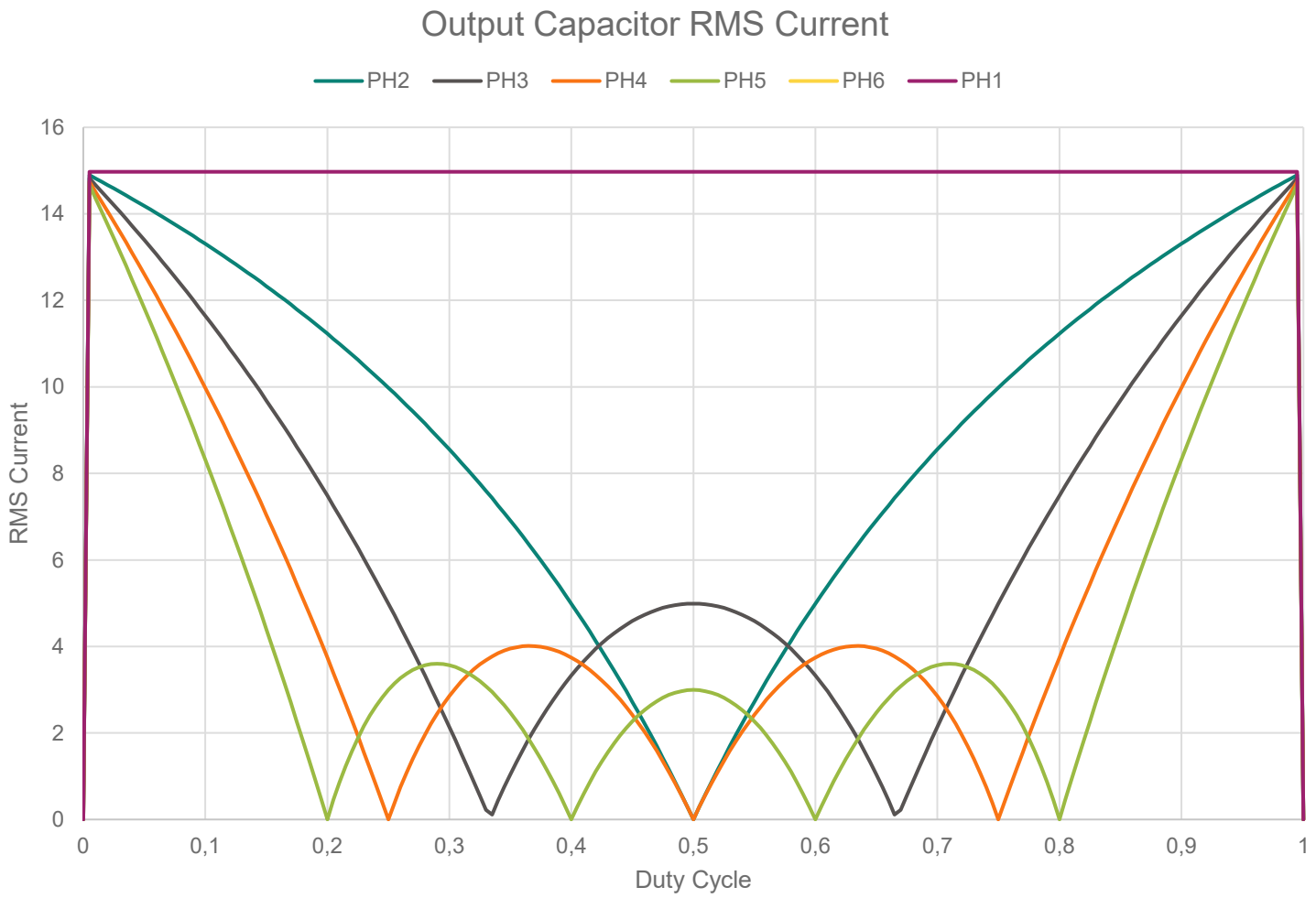

$$I_{COP(RMS)} = \Delta I_L * \frac{N_{PH}}{D*(1-D)} * \left(D - \frac{M}{N_{PH}}\right) * \left(\frac{1+M}{N_{PH}} - D\right)$$

Where,

- D = V_{OUT} / V_{IN}
- N_{PH} = No of Phases
- M = floor (N_{PH} * D)
- ΔI_L = Inductor ripple current

Example,

- VIN : 12.0 V
- VOUT : 0.75 V
- IOUT : 65.0 A
- L : 85nH
- ΔI_L : 15.0 A

Copyright © Infineon Technologies AG 2026. All rights reserved.

Smart Power Stages

The AI-ADAS Power Challenges

Thermal Management

- Heat due to heavy data processing
- System failures

1

Load Transients

- Rapidly Changing Loads
- Can cause voltage dips

2

Range vs Efficiency

- Efficiency impacts the EV range
- Less battery size , Weight

3

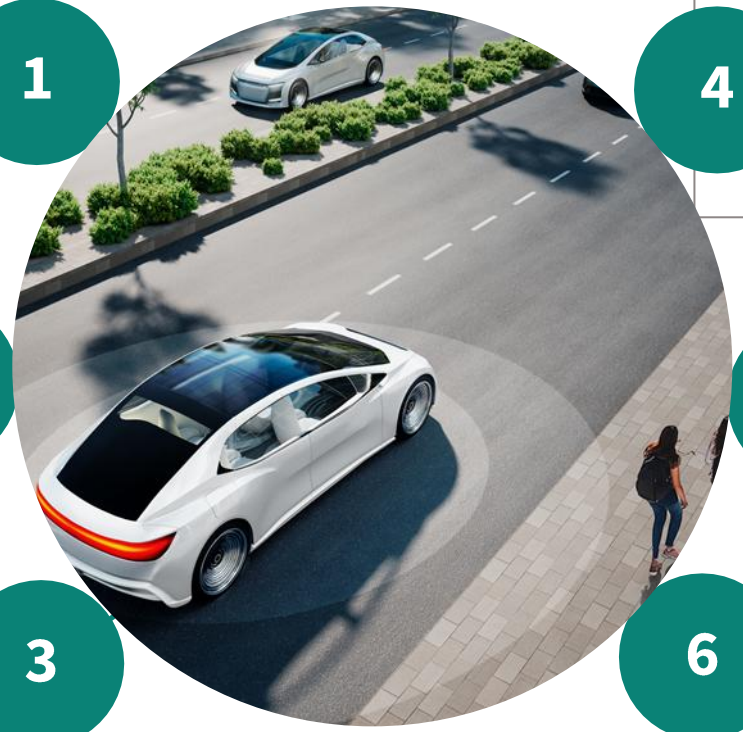

4

High Performance Compute

- Multi-Domain Execution
- Sensor Fusion

5

Electromagnetic Interference (EMI)

- Noisy environment
- Interfering with sensitive sensor data

6

Multiphase - Load Sharing

- Higher load demands
- Scalability

Copyright © Infineon Technologies AG 2026. All rights reserved.

TLF12505: Automotive Power Stage
AEC-Q100 Smart DriverMos / Power Stage

Applications

ADAS/AD domain controller, in-vehicle infotainments, cockpit domain controllers, central car computer/server AEC-Q100 QM power stage

Features

- **Synchronous buck driver with FET integrated**
  - Input voltage range: 4.25 V – 20 V (30 V abs. max)
  - Output voltage range: 0.225 V – 5.5 V @ VIN = 12 V
  - VCC, VDRV: 4.25 V – 5.5 V
  - Up to 2 MHz fixed frequency operation
  - Compatible with 3.3 V / 5 V tri-state PWM Input
  - DEEP SLEEP mode for power saving with EN = low (30 µA typ.)
  - TLF12505 : 60 A average load current, 90 A over current protection (OCP)
  - TLF12505A: 100 A over current protection (OCP), IMON flag disabled
  - Negative over current protection (NOCP)
  - On-chip MOSFET current-mirror sensing and reporting
- **Fault protection features**
  - VDRV and BOOT under voltage lockout (UVLO)
  - 8-mV/C temperature analogue output
  - Enhanced over temperature protection and thermal shutdown
  - Cycle-by-cycle OCP and flag
  - Control MOSFET short (HSS) detection and flag
  - Auto-replenishment on bootstrap capacitor
- **Package**
  - PG-VIQFN-36 (5 mm x 6 mm) 0.5 mm pitch
  - AEC-Q100 grade 1 - Operating temp: -40°C ≤ Tj ≤ 150°C

Multiphase buck system – power stage

Common Footprint



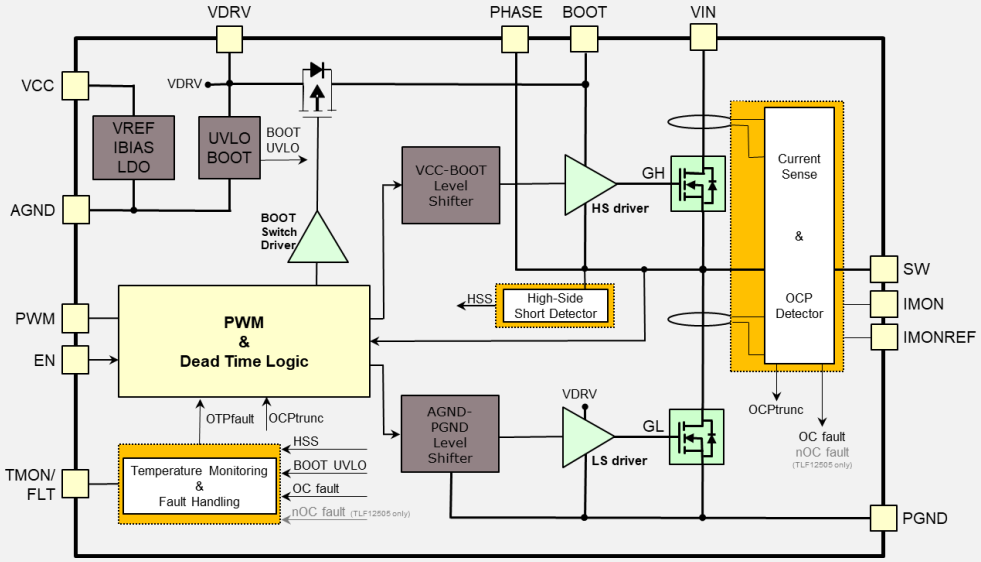

Availability

MPN: TLF12505 – **Availability:** NOW

MPN: TLF12505A – **Availability:** NOW

Copyright © Infineon Technologies AG 2026. All rights reserved.

Power Stage interface with multi phase controller

Multi phase controller

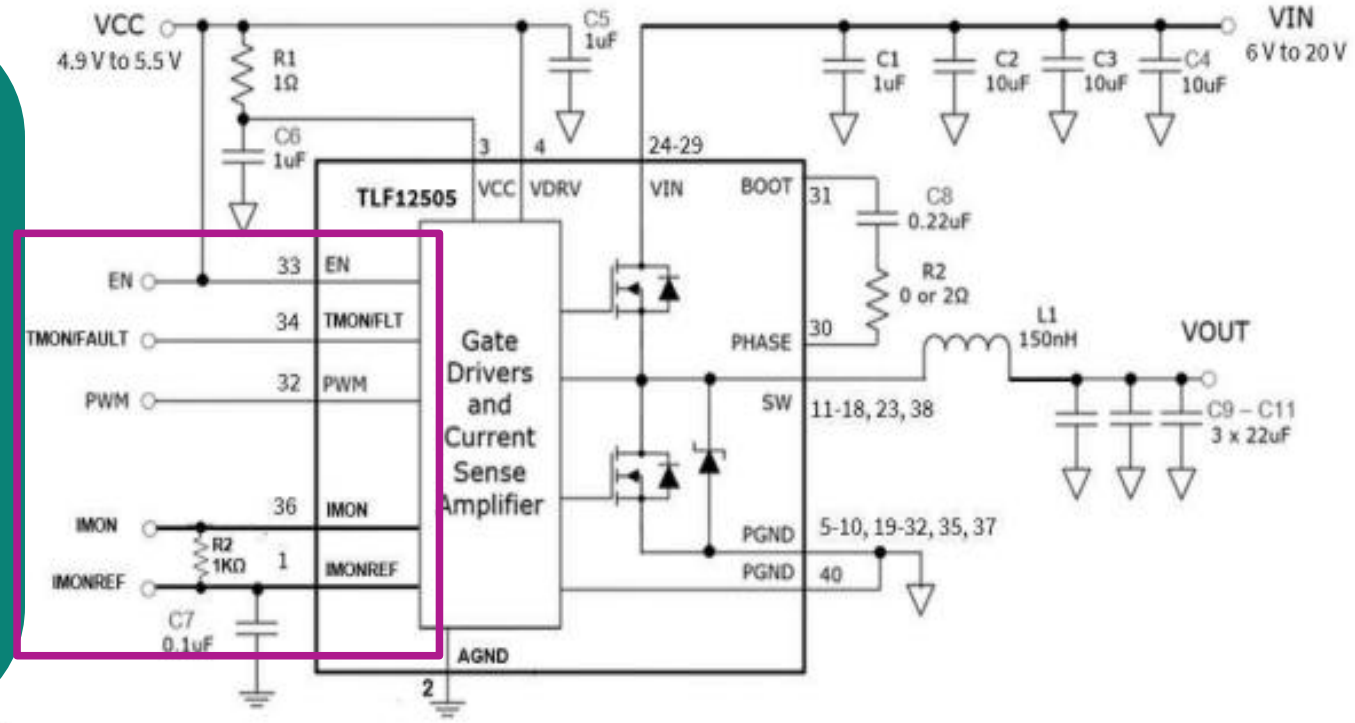

Copyright © Infineon Technologies AG 2023. All rights reserved.

Infineon Power Stages (DrMos) TLF12505A – Value Proposition

Design challenges	Infineon Smart Power Stages
Power density	**Best-in-class TDC & Imax efficiency** with OptiMOS™ Vertical MOSFETs
Repetitive Avalanche Robustness	**3% IOUT accuracy variation** under long term stress test
Mini PWM Pulse Handling	Proven Record to avoid driver failure
Fault Handling	**Fast detection and response** improves system reliability
Superior Side-by-Side multi chip packing	**Side-by-Side Multi chip packing avoids stacked die to improve the robustness, thermal performance and noise immunity**



PERFORMANCE

QUALITY

TCO $

SYSTEM COST LEADERSHIP

Copyright © Infineon Technologies AG 2026. All rights reserved.

Getting started with TLF12505A EVK

SDB901:
TLF12505A Evaluation Kit (EVK) Board Features

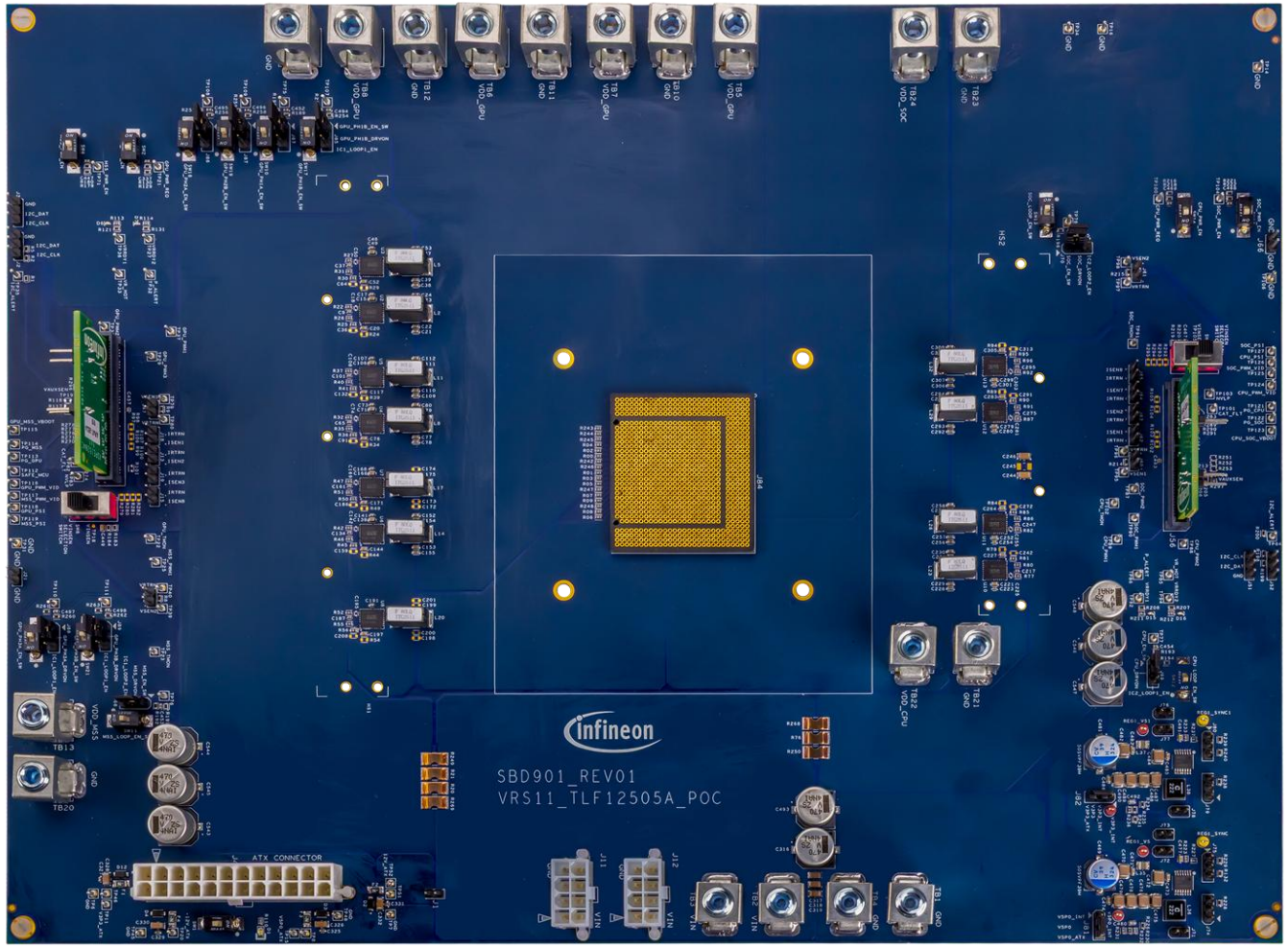

- ✓ TLF12505A power stage with 100 A OCP.
- ✓ Supports four independent output voltage rails:
  - ✓ **Loop A**: 240 A TDC
  - ✓ **Loop B**: 40 A TDC
  - ✓ **Loop C**: 80 A TDC
  - ✓ **Loop D**: 55 A TDC
  - ✓ Powered by TLF12505A
- ✓ Supports Infineon's proprietary Load-Bouncer
- ✓ Supports MPC

Copyright © Infineon Technologies AG 2026. All rights reserved.

Load test setup

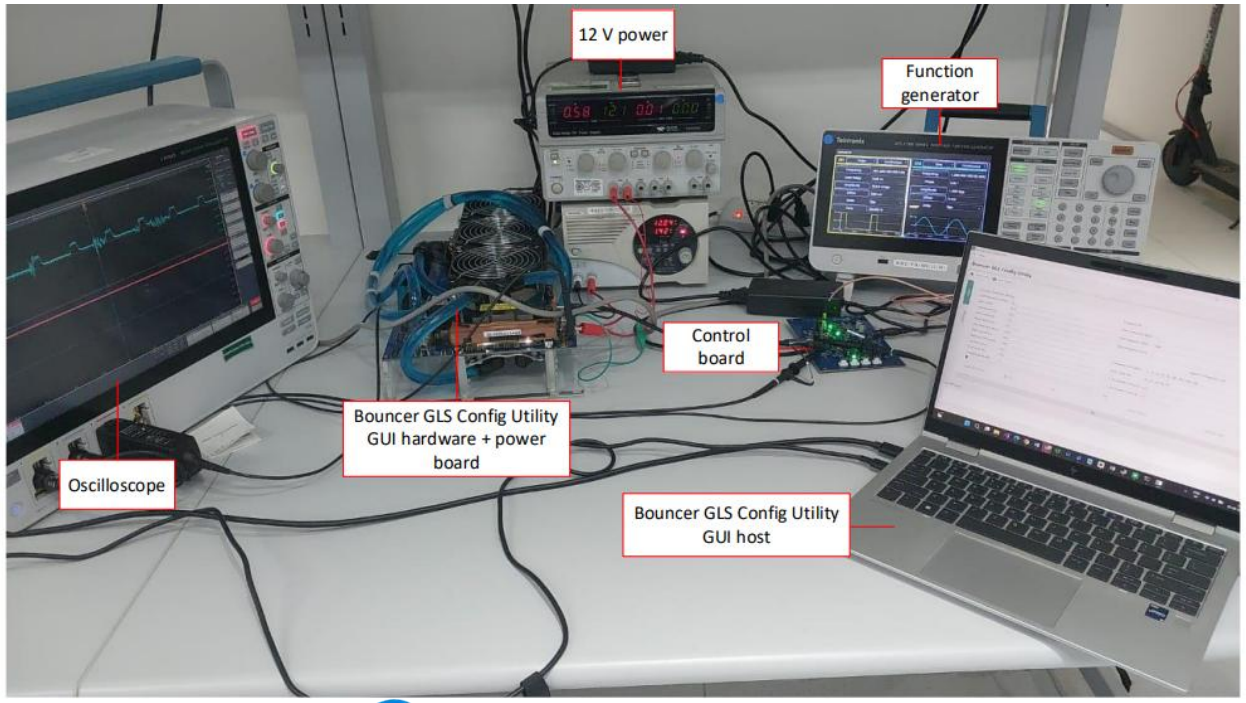

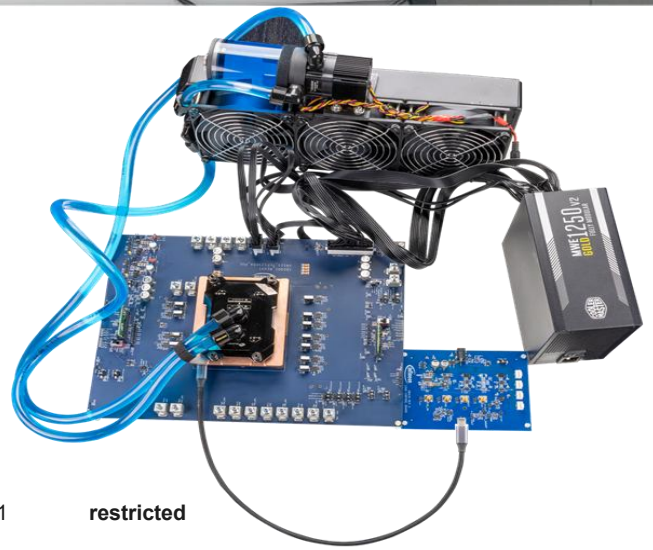

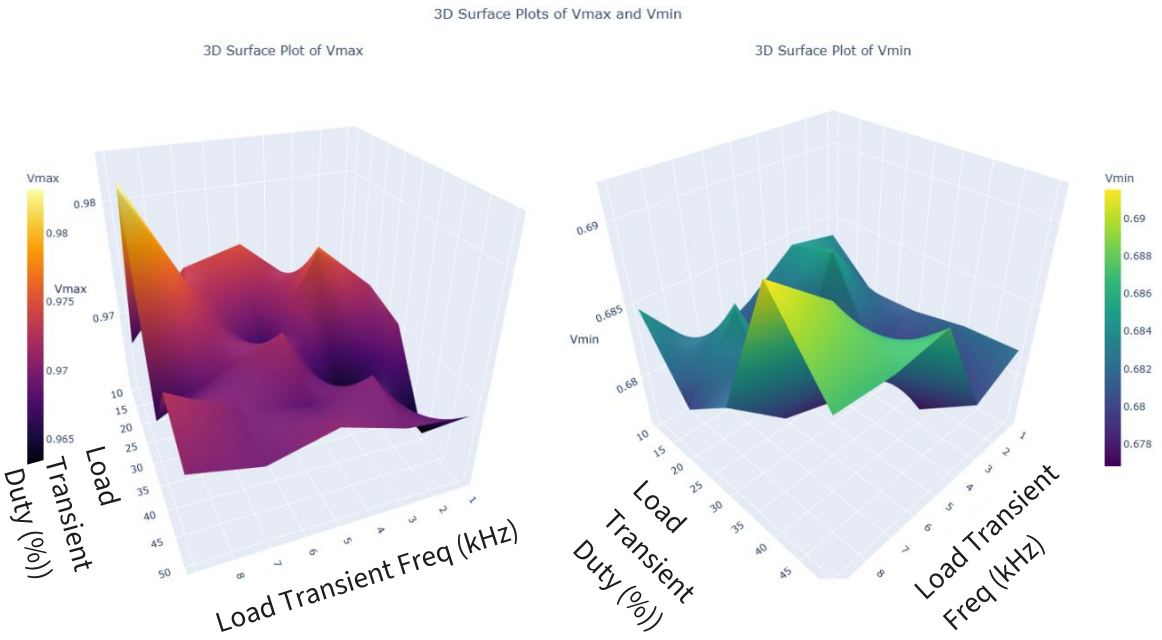

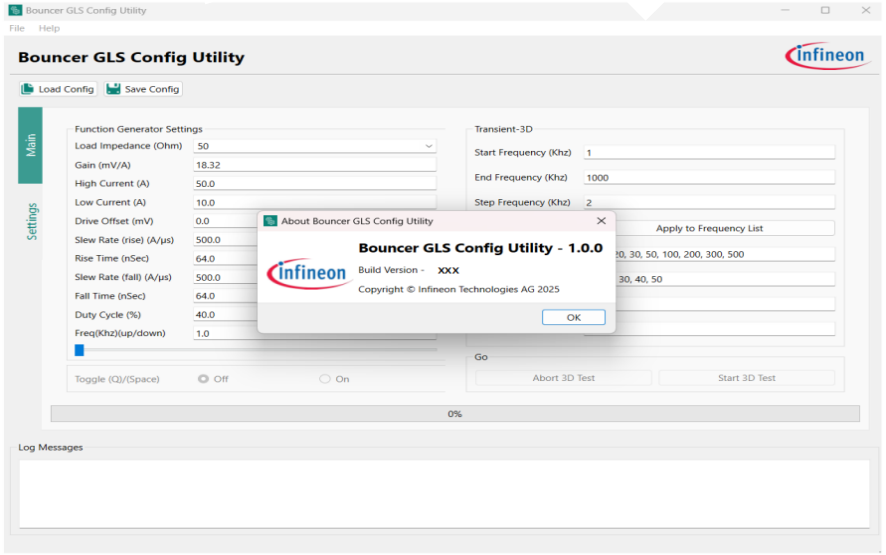

Copyright © Infineon Technologies AG 202

Efficiency @ V_{IN} : 12V

Loop	V_{OUT} (V)	I_{OUT} (A)	Peak η (%)
Loop A	0.8	74	90.21
Loop B	0.8	15	89.93
Loop C	0.8	25	90.47
Loop D	0.8	25	90.4

Loop	V_{OUT} (V)	I_{OUT} (A)	FL η (%)
Loop A	0.8	240	83.82
Loop B	0.8	40	85.23
Loop C	0.8	80	85.24
Loop D	0.8	55	88.23

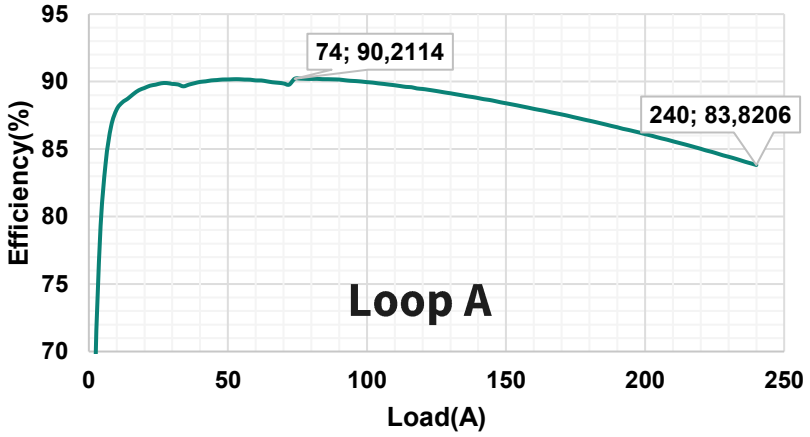

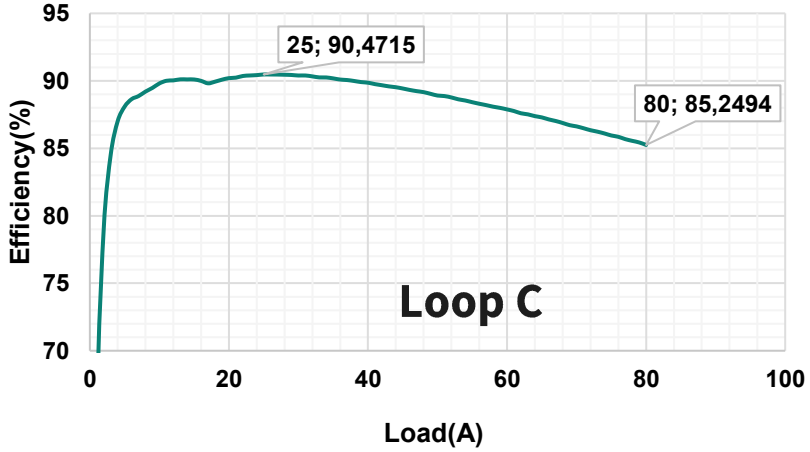

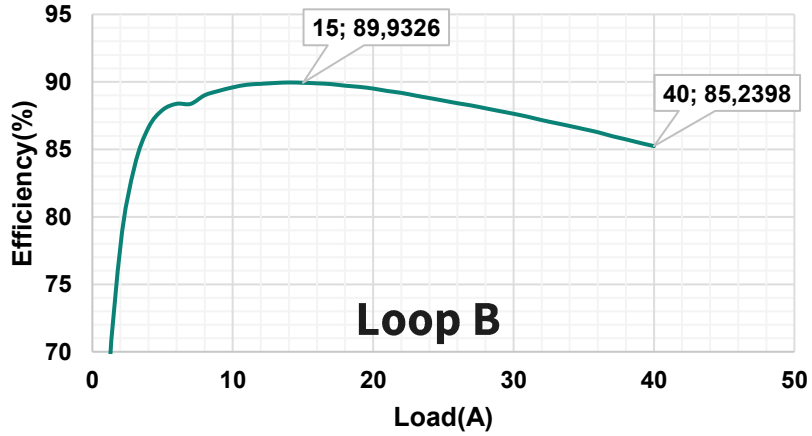

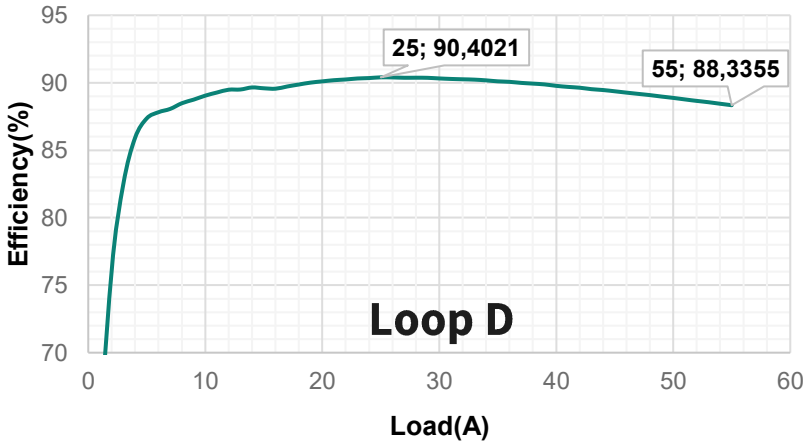

Copyright © Infineon Technologies AG 2026. All rights reserved.

Thermal Performance



Loop A: TOP View @ ambient ; V_{IN}: 12.0 V; V_{OUT}: 0.8 V, I_{OUT}:240 A

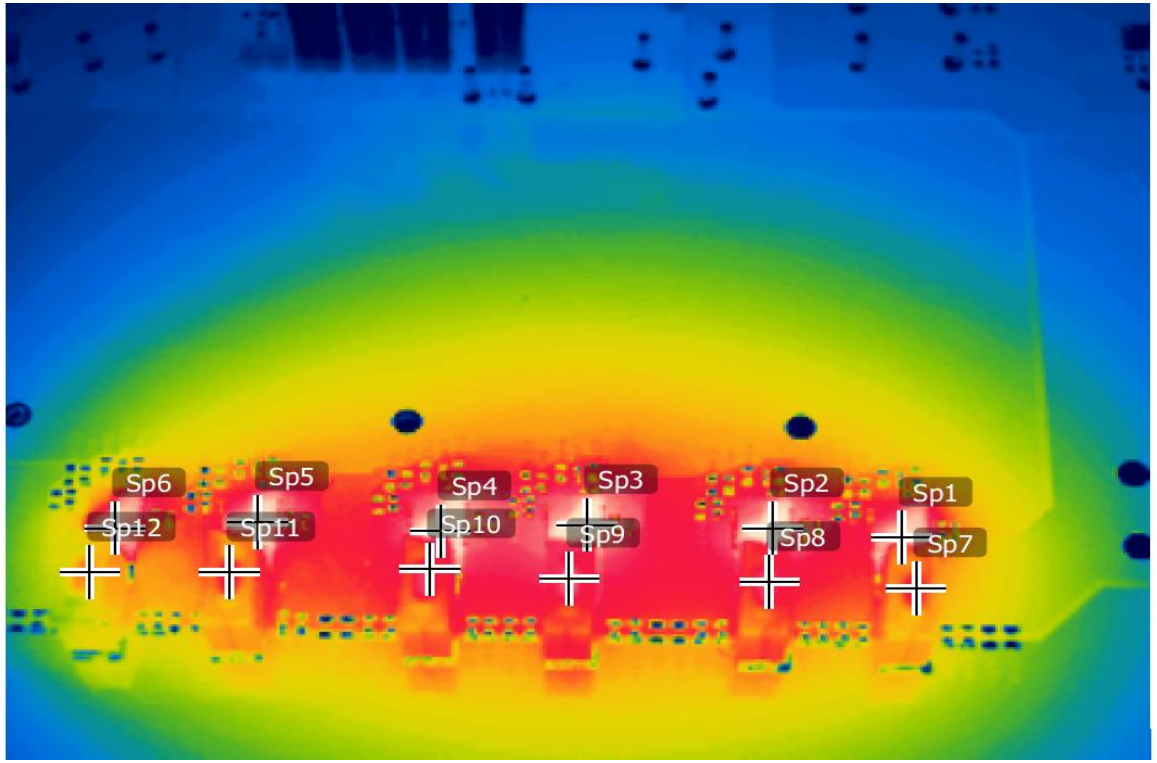

Markers	Designator	Component	Temperature (° C)
SP1	U3	Powerstage	102.7
SP2	U2	Powerstage	106.7
SP3	U5	Powerstage	109.2
SP4	U4	Powerstage	108.9
SP5	U7	Powerstage	102.3
SP6	U6	Powerstage	98.9
SP7	L5	Power Inductor	83.5
SP8	L2	Power Inductor	88.3
SP9	L11	Power Inductor	89.5
SP10	L8	Power Inductor	86.7
SP11	L17	Power Inductor	84.0
SP12	L14	Power Inductor	78.1

Copyright © Infineon Technologies AG 2026. All rights reserved.

High Current Voltage Rails in TLF12505A EVK

Voltage Rail					
Power Rail	Switching Freq(kHz)	Inductor (nH)	Rail_Name	V_Out (V)	Load Step
1	650	85	Loop_A	0.8	1A to 420A

SPECIFICATION	DESCRIPTION	MINIMUM	TYPICAL	MAXIMUM	UNIT
Allowable Undershoot at EDPp	Total output deviation	-	150	-	mV
Allowable Overshoot at EDDp	Total output deviation	-	200	-	mV

Copyright © Infineon Technologies AG 2026. All rights reserved.

Peak loading in multi phase operation- Loop A



CH1,2,3: I_{MON}
CH4: I_{LOAD}
CH5: V_{OUT}
CH6: PWM
Undershoot: 680.6 mV (119.4 mV)
Recovery Time:14.188 µs
V_{IN} :12.0 V;
I_{OUT} Transition :0.0A to 420.0A
Slew Rate : 420A/us



CH1,2,3: I_{MON}
CH4: I_{LOAD}
CH5: V_{OUT}
CH6,7,8: PWM
Overshoot: 965.2mV (165.2 mV)
Recovery Time: 24.6 µs
V_{IN} :12.0 V;
I_{OUT} Transition : 420.0A to 0.0A
Slew Rate : 420A/us

Copyright © Infineon Technologies AG 2026. All rights reserved.

TLF12505A Dynamic load transient response Demo Video

OPTIREG™ Multiphase TLF12505A Power Stage Design-in support

Electrical simulation & modelling

- OrCAD™ PSPICE®
- SIMetrix™ SIMPLIS®

Mechanical & Thermal simulation & modelling



- Mentor Graphics™ FloTherm®
- 3D STEP
- PCB (Altium, Cadence, Mentor, Eagle)
- *Ansys™ IcePAK®**



Application Notes

- EMC performance report
- Hardware Design Guideline

System level verification

- Transient response and efficiency benchmarking supporting all SoCs

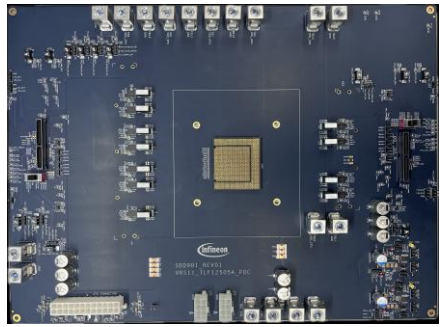

** on request*

Copyright © Infineon Technologies AG 2026. All rights reserved.

Learn more about OPTIREG™ Multiphase Solutions and ICs

Visit us on our website:

https://www.infineon.com/part/TLF12505A/

Copyright © Infineon Technologies AG 2026. All rights reserved.


Infineon