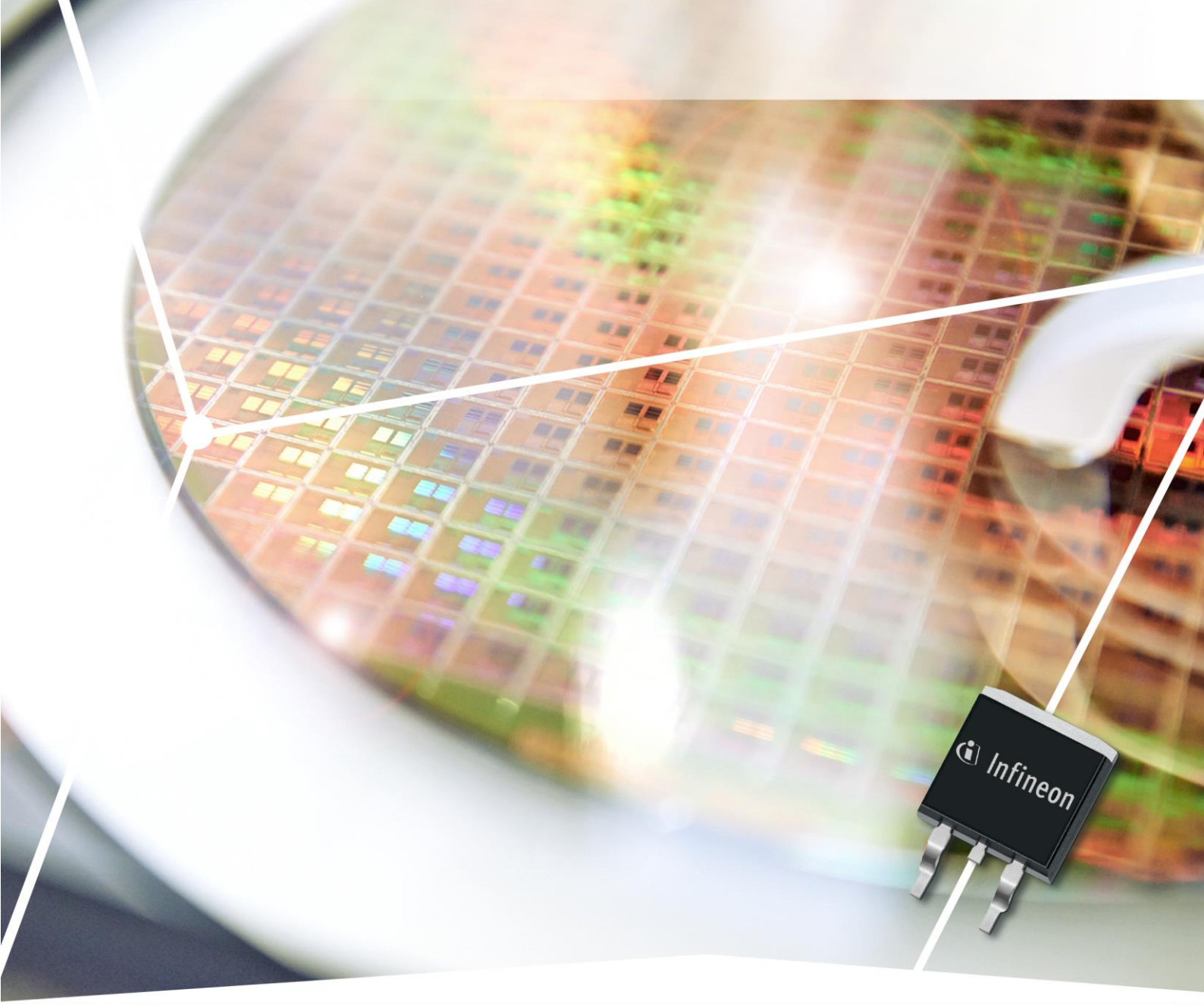

Infineon Technologies
Special edition of New Product Introduction

XMC4300 Microcontroller with EtherCAT®

Part of your life.
Part of tomorrow.

XMC4300 Microcontroller with EtherCAT®



The new XMC4300 microcontroller series further reduces complexity in EtherCAT® implementation and cost in factory automation, industrial motor control, I/O modules and robotics. The XMC4300 series was specifically developed for EtherCAT industrial applications, where cost pressure places a premium on design flexibility, connectivity and performance without compromise to EtherCAT communication features. Like the XMC4800 the XMC4300 offers the EtherCAT® node on an ARM® Cortex®-M controller with on-chip flash and analog/mixed signal capabilities. There is no need for a dedicated EtherCAT® ASIC, external memory and crystal resulting in exceptional BOM cost and PCB space savings.

Features

- Cortex®-M4 @ 144 MHz
- EtherCAT®
- Outstanding Flash RAM ratio with 256 kB Flash and 128 kB RAM
- 2 CAN nodes with 64 message objects
- Rich industrial and external media connectivity
- 125°C extended temperature range
- Long-term availability with more than 15 years
- Free DAVE™ IDE and DAVE™ Apps

Benefits

- Most compact EtherCAT® design – no additional external components required
- Bill of material (BOM) cost and PCB space savings
- Seamless cost and performance migration paths between XMC4300 and XMC4800 devices
- Enablement of EtherCAT® technology in harsh environments with 125°C ambient temperatures
- Supports very long product lifetimes through long time availability at least until 2031

Target applications

- Medium-end Industrial Control
- Industrial Communication

Block diagram

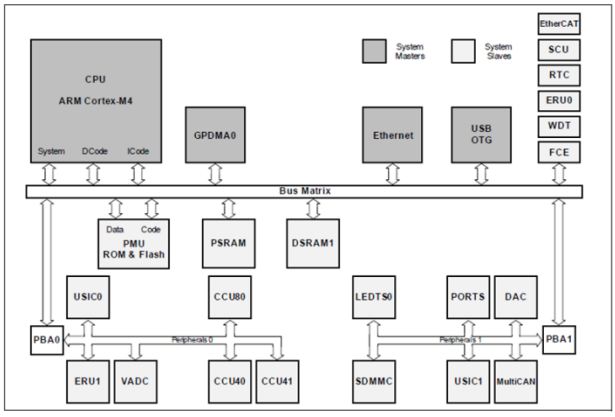

NEW Completing products (P2S)

Excellent system solution with the following Infineon products:

- OptiMOS™/ StrongIRFET™ - A powerful combination with an expanded product portfolio 20 V - 300 V able to adress a broad range of requirements like SMPS, motor control and drives, inverters and computing.
- CIPOS™ - transfer-mounted intelligent power module enabling cost efficient designs
- CoolMOS™ P6 - ease-of-use and superior efficiency for your SMPS solutions (PFC + LLC)
- EiceDRIVER™ 2EDL (Compact/ Enhanced) - feature-rich Gate Driver`s for compactness and high efficiency

Support/tools/software

- DAVE™ (Version 4) – Development Platform for XMC™ Microcontrollers
- XMC4300 Relax EtherCAT ® Kit

Product collaterals/online support

- Product page
- Product brief

Evaluation boards: XMC4300 Relax EtherCAT ® Kit



OPN	SP Number
KITXMC43RELAXECATV1TOBO1*	SP001495558

Product overview

OPN	SP Number	MOQ	Registrable	Package
XMC4300F100F256AAXQMA1	SP001410668	540	Y	LQFP-100
XMC4300F100K256AAXQMA1	SP001410674	540	Y	LQFP-100