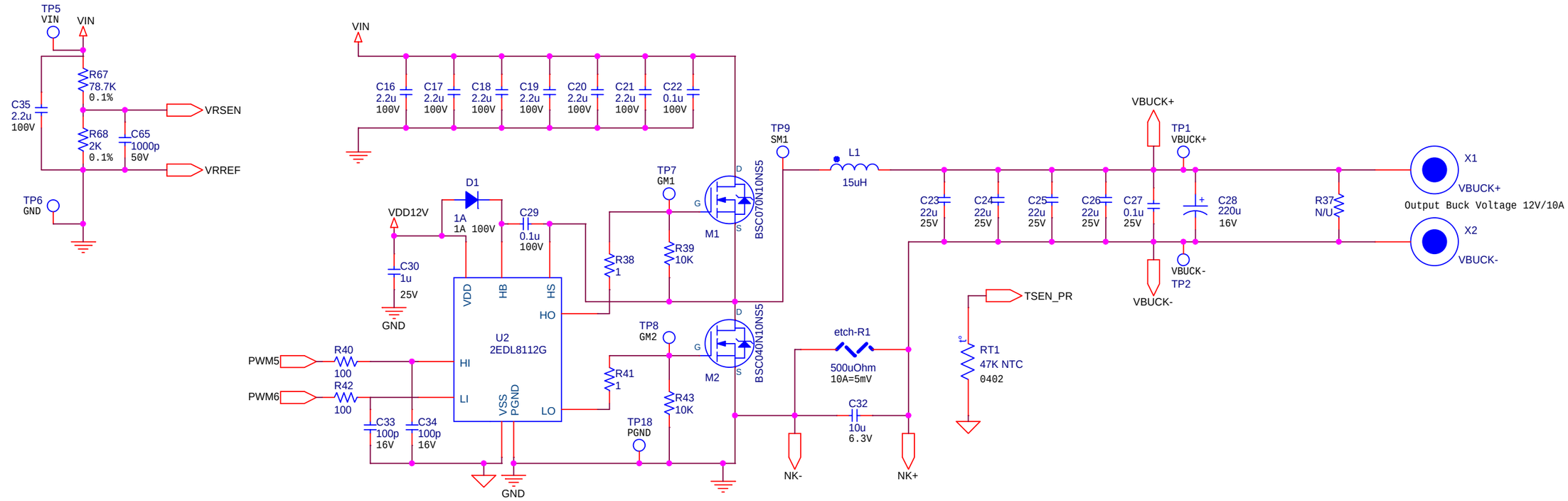

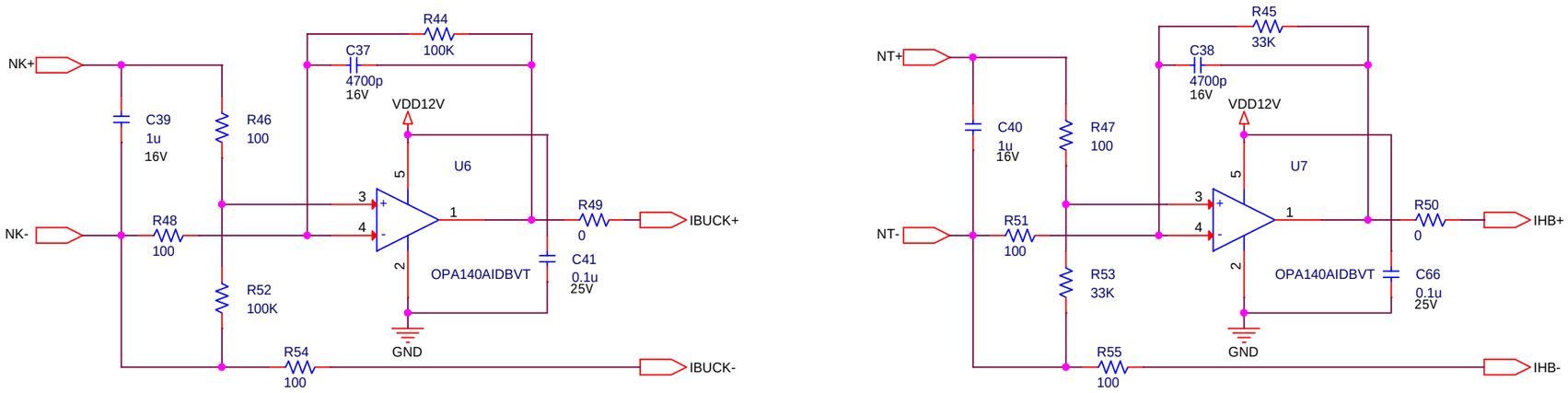

Infineon Technologies Asia Pacific Pte Ltd 8 Kallang Sector, Singapore 349282		
Title	MVPOL_DSN	48V Non-Isolated POL 36-75VDC to 1V/70A & 12V/11A 2 buck
Size	Document Number	Rev B
Date: Tuesday, December 01, 2020	Sheet 1 of 3	

HBpri_CDsec

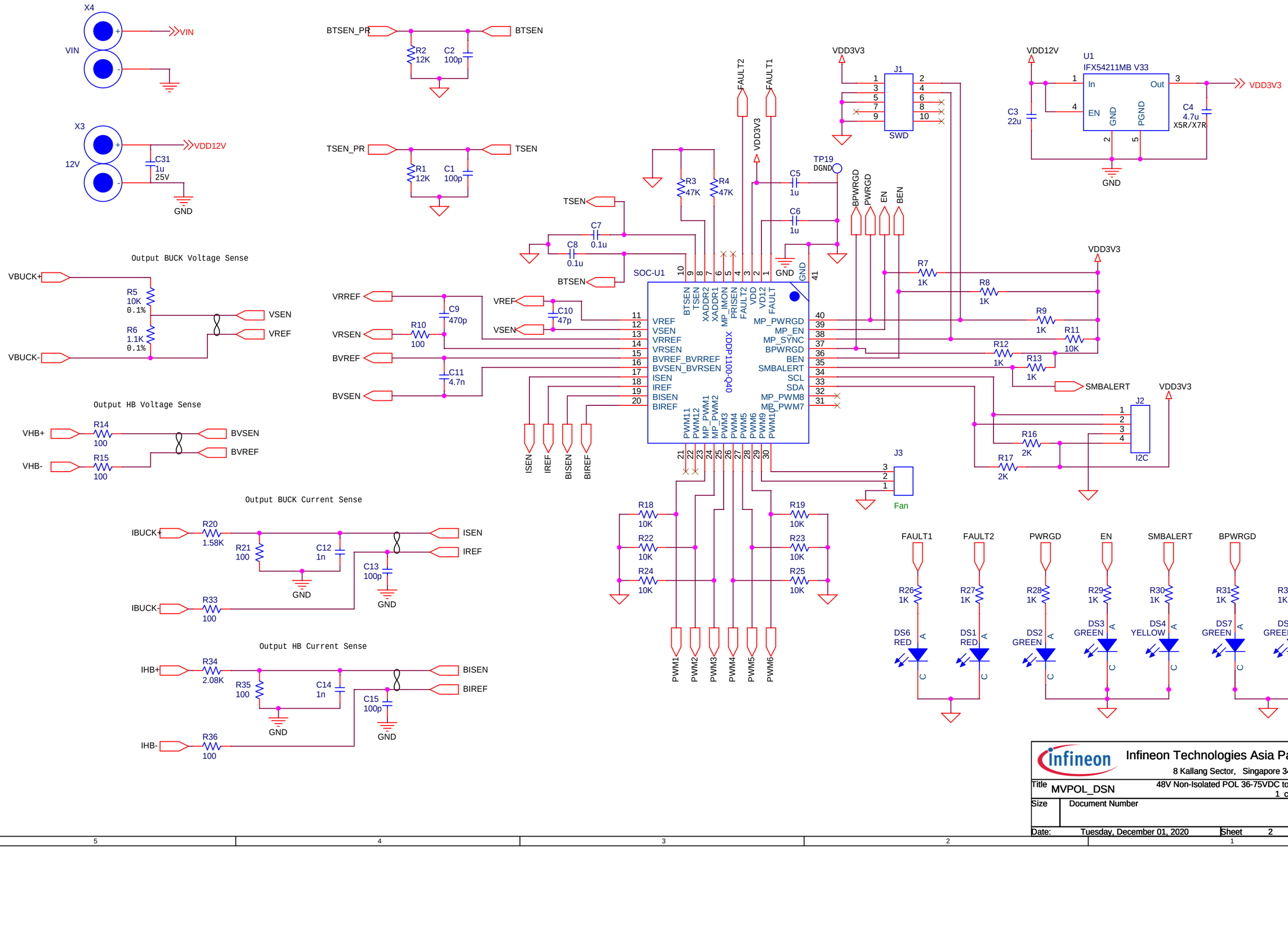

Infineon Technologies Asia Pacific Pte Ltd	8 Kallang Sector, Singapore 349282
Title	MVPOL_DSN — 48V Non-Isolated POL 36-75VDC to 1V/70A & 12V/11A 1 control
Size	Document Number — Rev B
Date:	Tuesday, December 01, 2020 — Sheet 2 of 3

H1 Spacer M3
H2 Spacer M3
H3 Spacer M3
H4 Spacer M3

VIN
C36 2.2u 100V
VDD12V
C46 1u 25V
GND
D2 1A 1A 100V
C47 0.1u 100V
C45 0.1u
TP11 H0
HB HS
C48 10u 50V
C49 10u 50V
C50 10u 50V
PWM4
R61 100
G1
PWM3
R62 100
G2
U5
CONTROLLER
DHP1050N10N5
C59 100p 16V
C60 100p 16V
TP10 L0
TP13 PGND
C61 10u 50V
C62 10u 50V
C63 10u 50V

OUTB
TP14 OUTB
R58 1
R59 10K
M3 BSC009NE2LS5I
R69 1
R60 10K
M4 BSC009NE2LS5I
R70 1
R73 10K
M5 BSC009NE2LS5I
NT-
GND
TP16 SS
T1
T1_Ss
T1_Pf
T1_Ps
T1_Sf
6T
1T
ML95S
L2 0.22uH
L3 0.22uH
TP17 SF
TP15 OUTA
OUTA
R64 1
R65 10K
M6 BSC009NE2LS5I
R71 1
R66 10K
M7 BSC009NE2LS5I
R72 1
R74 10K
M8 BSC009NE2LS5I
TP12 NK-

PWM2
R56 100
C42 100p 16V
VDD12V
U4
ENB INA INB PGND
ENA 2EDN7524G
VDD OUTA OUTB VSS
R57 100
PWM1
C43 100p 16V
C44 1u 25V
GND
OUTA
OUTB

C53 100u 6.3V
C54 100u 6.3V
C55 100u 6.3V
C56 100u 6.3V
C57 100u 6.3V
C51 100u 6.3V
C58 0.1u 25V
TP3 VHB+
TP4 VHB-
C52 1000u 4V
R63 N/U
VHB+
VHB-
X5 VHB+
X6 VHB-
Output HB Voltage 1V/70A

C64 10u 4V
126uOhm
etch-R2
153u 25°C
70A = 10.7mV
NT-
NT+

RT2
BTSEN_PR
47K NTC 0402

Infineon Technologies Asia Pacific Pte Ltd 8 Kallang Sector, Singapore 349282			
Title	MVPOL_DSN	48V Non-Isolated POL 36-75VDC to 1V/70A & 12V/11A 3 hbcdr	
Size	Document Number		Rev B
Date:	Tuesday, December 01, 2020	Sheet 3 of 3	