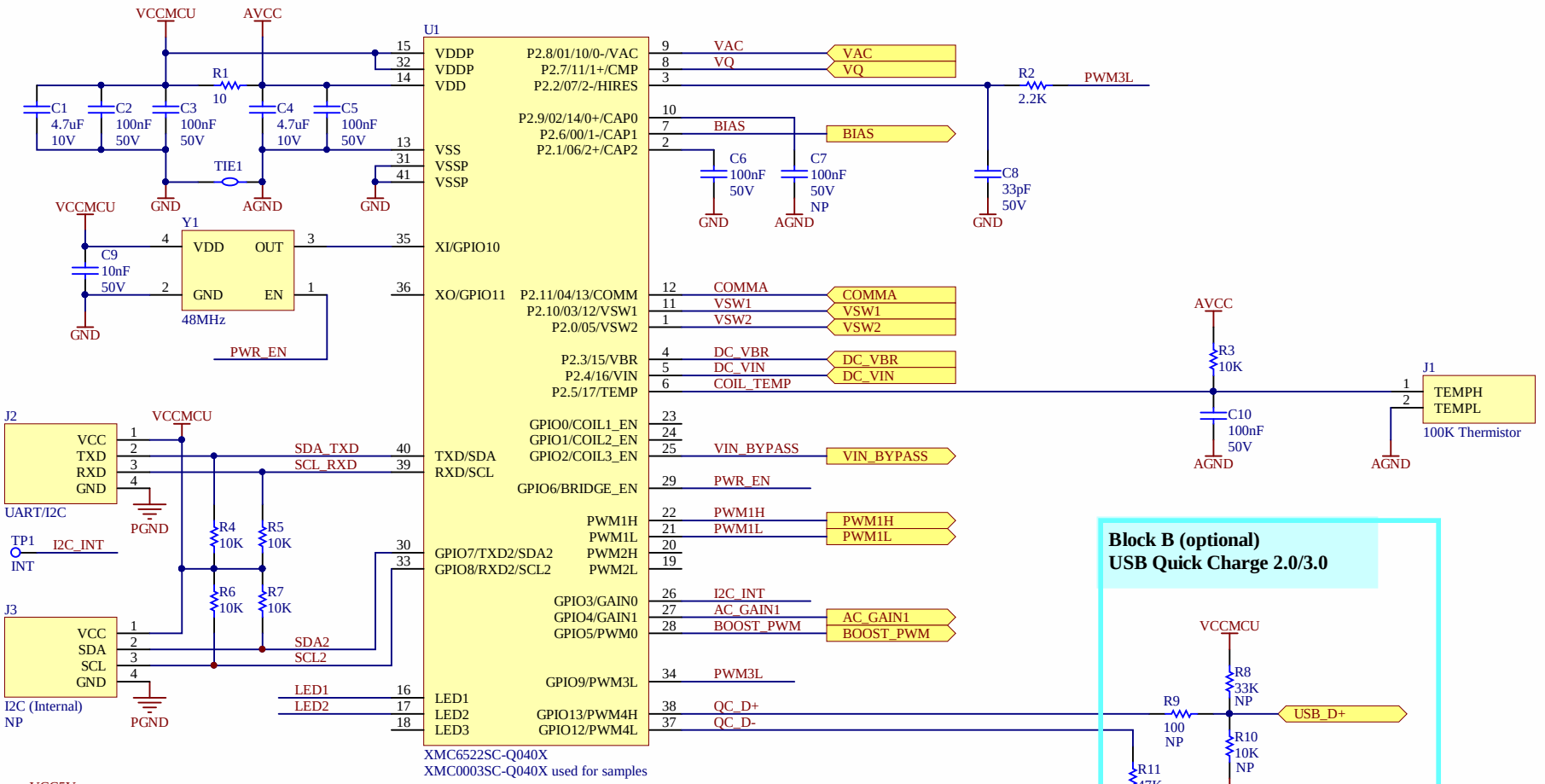


*The Valkyrie Qi 1.3 15W Transmitter (9V-12V Boost)*
*Wireless Power Controller*

| Number: SPK-4102-1C15C-BOOST | Revision: 2.0 | Date: 9/25/2020 | Sheet 1 of 4 |
|---|---|---|---|

spark connected
Powering the world, wirelessly™

Spark Connected NDA-Confidential

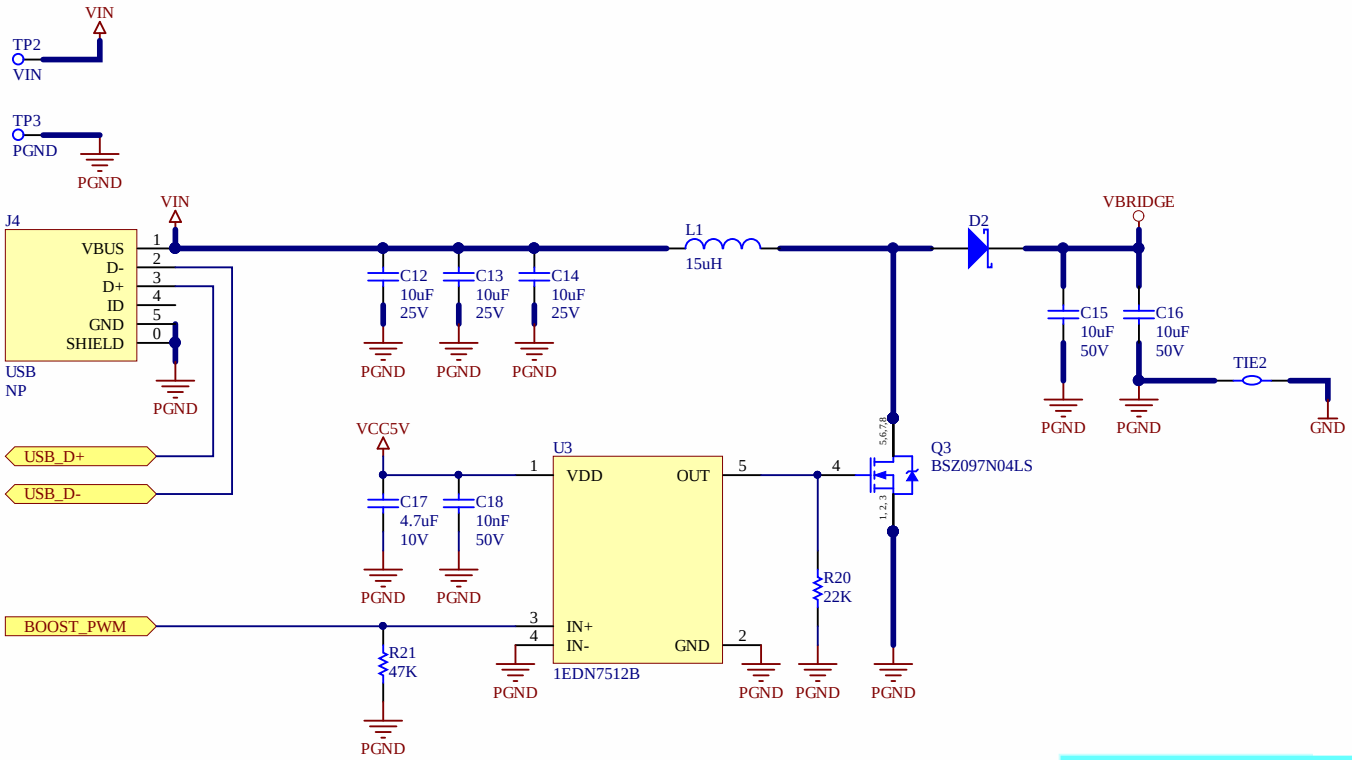


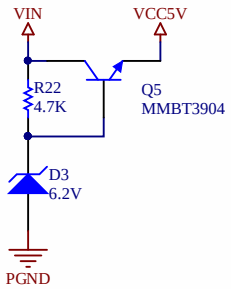


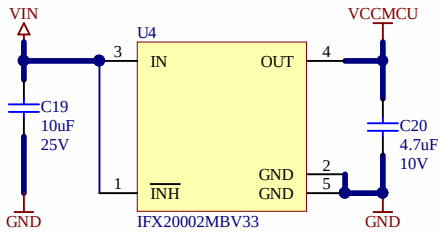


Place close to CPU

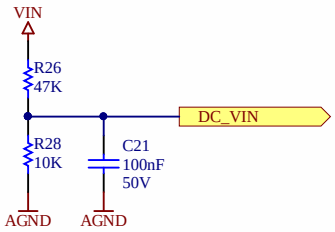


Place close to CPU.

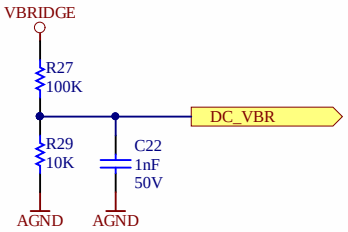


Place close to CPU.

**Block C (optional)**
**5V Bypass**

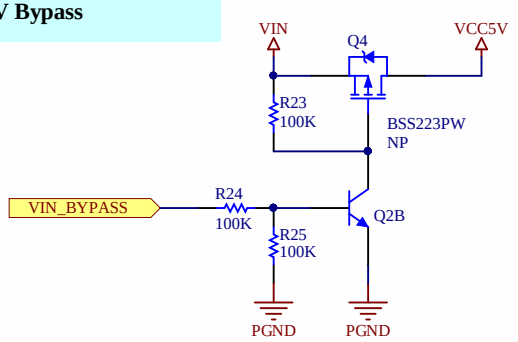


VIN Bypass only used for 5W power transfer with a 5V only power adapter

| | | | |
|---|---|---|---|
| ***The Valkyrie Qi 1.3 15W Transmitter (9V-12V Boost) Power Supply*** | | | |
| Number: SPK-4102-1C15C-BOOST | Revision: 2.0 | Date: 9/25/2020 | Sheet 2 of 4 |

spark connected
Powering the world, wirelessly™

Spark Connected NDA-Confidential

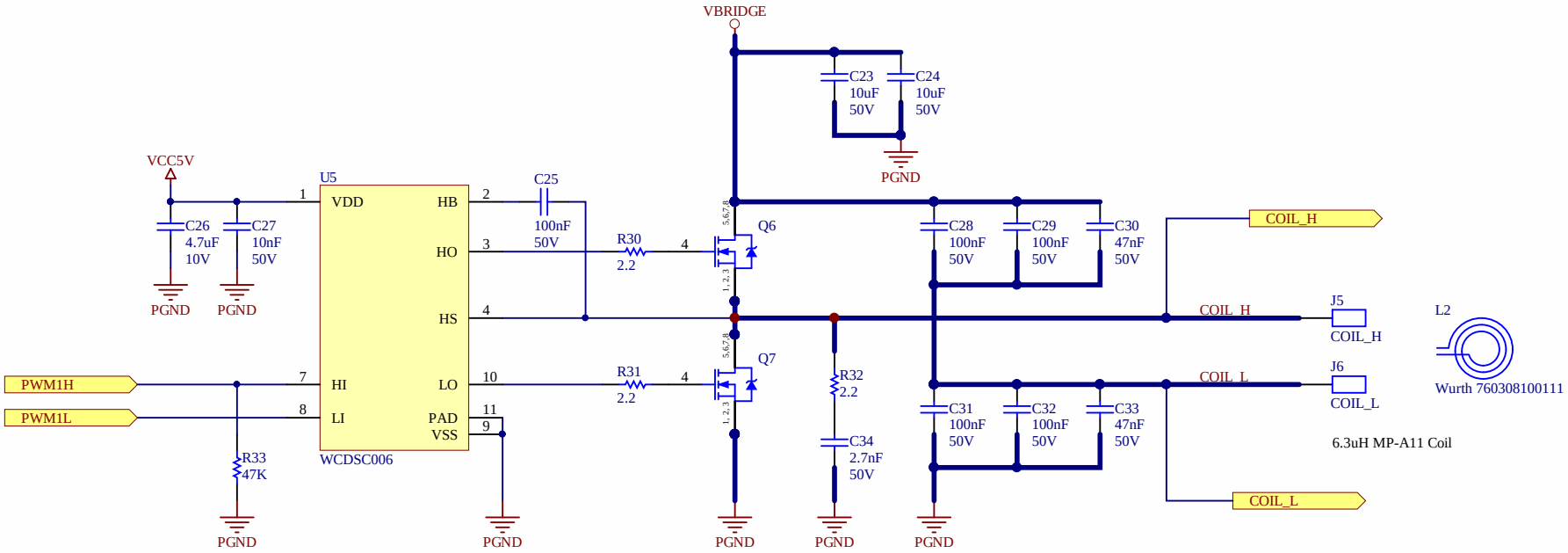


*The Valkyrie Qi 1.3 15W Transmitter (9V-12V Boost) Bridge Driver*

| Number: SPK-4102-1C15C-BOOST | Revision: 2.0 | Date: 9/25/2020 | Sheet 3 of 4 |
|---|---|---|---|

spark connected
Powering the world, wirelessly™

Spark Connected NDA-Confidential

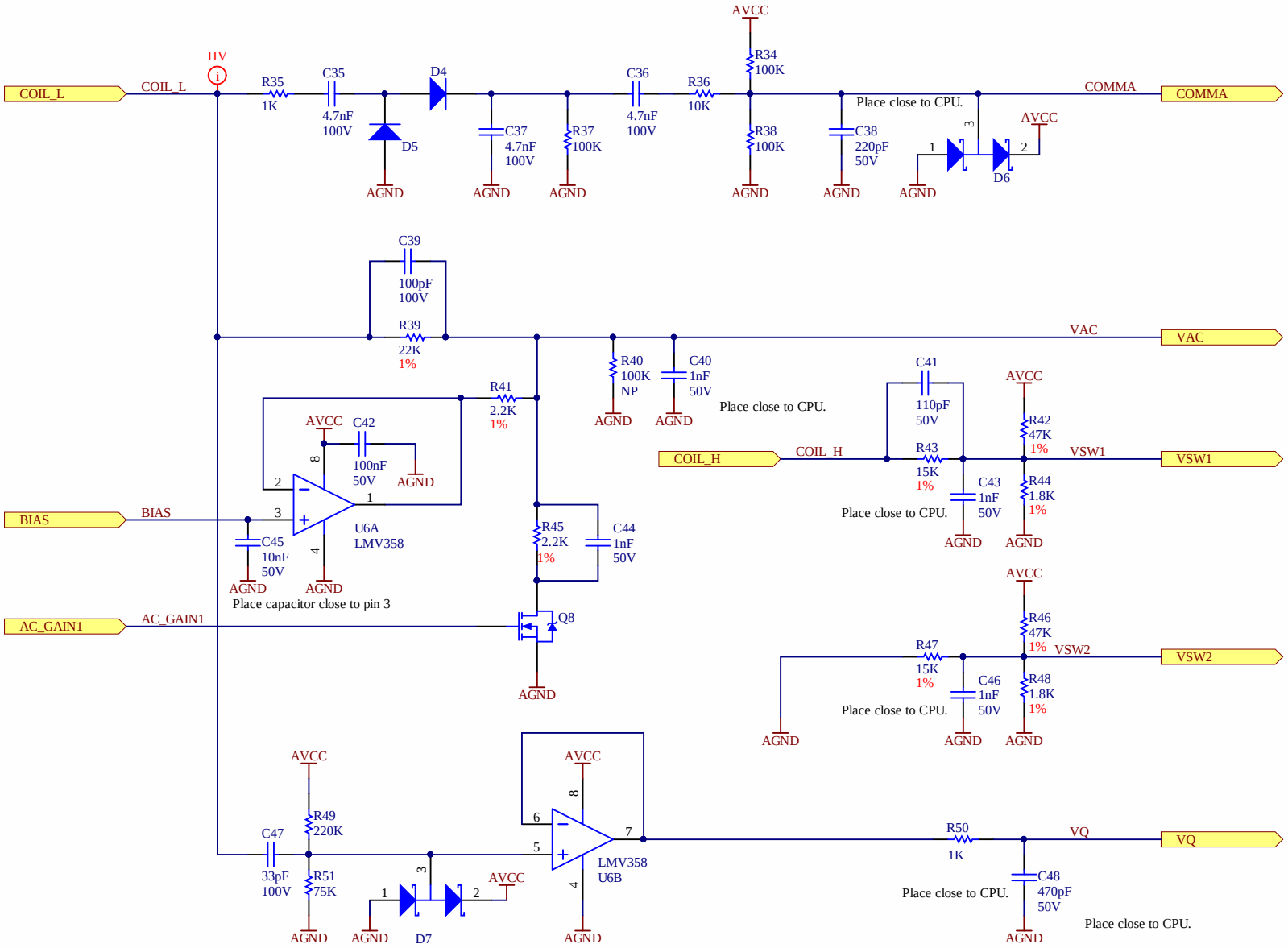


*The Valkyrie Qi 1.3 15W Transmitter (9V-12V Boost)*
*Demodulation*

| Number: SPK-4102-1C15C-BOOST | Revision: 2.0 | Date: 9/25/2020 | Sheet 4 of 4 |
|---|---|---|---|

spark connected
Powering the world, wirelessly™

Spark Connected NDA-Confidential