Qi transmitter (Tx) for smartphone charging

Ordering code: REF_10WTx_QI_4102

About this document

Scope and purpose

This document is an engineering report that describes a 15 W wireless power transmitter evaluation board. It is a high-performance, easy-to-use development kit designed for applications with wireless power transfer of up to 15 W. It supports an input voltage range of 9 V to 12 V and is compatible with QC 2.0/3.0 adapters. The transmitter provides designers with a certified platform that drastically reduces the development time of the end application. The system is compatible with WPC v1.2.4 receivers up to 15 W. Smartphones with proprietary fast-charge capability are also supported.

Intended audience

This document is intended for wireless power design/application engineers, etc. who wish to design a low-cost, highly reliable transmitter solution for charging smartphones. In addition other applications, such as handheld terminals, medical devices and many other battery-powered devices, can be addressed with that reference kit.

Table of contents

About this document 1
Table of contents 1
1 General description 2
2 Electrical specifications 4
3 Connector descriptions 5
4 Power supply 6
5 LED behavior 7
6 Test set-up 8
7 Efficiency 9
8 Thermal performance 10
9 Foreign Object Detection (FOD) 11
10 Schematics 12
11 Bill of Materials 15
12 Appendix A 18
13 Revision history 22

1 General description

The 15 W wireless power transmitter evaluation module is a high-performance, easy-to-use development kit designed for applications with up to 15 W of power transfer. It supports an input voltage range of 9 V to 12 V and is compatible with QC 2.0/3.0 adapters. The transmitter provides the designer with a certified platform that drastically reduces the development time of their end application. The system supports WPC v1.2.4 receivers up to 15 W, as well as all legacy Qi-certified receivers. Smartphones with proprietary fast-charge capability are also supported. Additional features and future standards changes are supported by the easy-to-upgrade software.The Infineon 15 W reference design is WPC v1.2.4 certified, and rated for a temperature range of +25°C to +85°C.

Key features

- Up to 15 W wireless power transfer
- WPC Qi v1.2.4 EPP certified
- Fixed-frequency power transfer
- MP-A11 coil configuration
- V_{in} range: 9 V to 12 V
- 83 percent peak efficiency
- Supports Q.C. 2.0/3.0 adapters
- Improved accuracy of Foreign Object Detection (FOD)
- Cost-optimized architecture with low Bill of Materials (BOM) count
- Two LED indicators for power transfer and fault conditions
- EMC, CISPR-22 compliant with no EMI choke
- +25°C to +85°C temperature range

Infineon components

- Wireless power controller XMCTM-SC (XMC6521SC-Q040X)
- OptiMOS™ 40 V power MOSFET (BSZ097N04LS)
- EiceDRIVER™ 1EDN (1EDN7512B)
- Wireless charging driver IC (WCDSC006)
- Monolithically integrated low-drop voltage regulator (IFX20002MB V33)
- OptiMOS™ P-channel MOSFET (BSS223PW)
- OptiMOS™ N-channel MOSFET (BSS138WH)

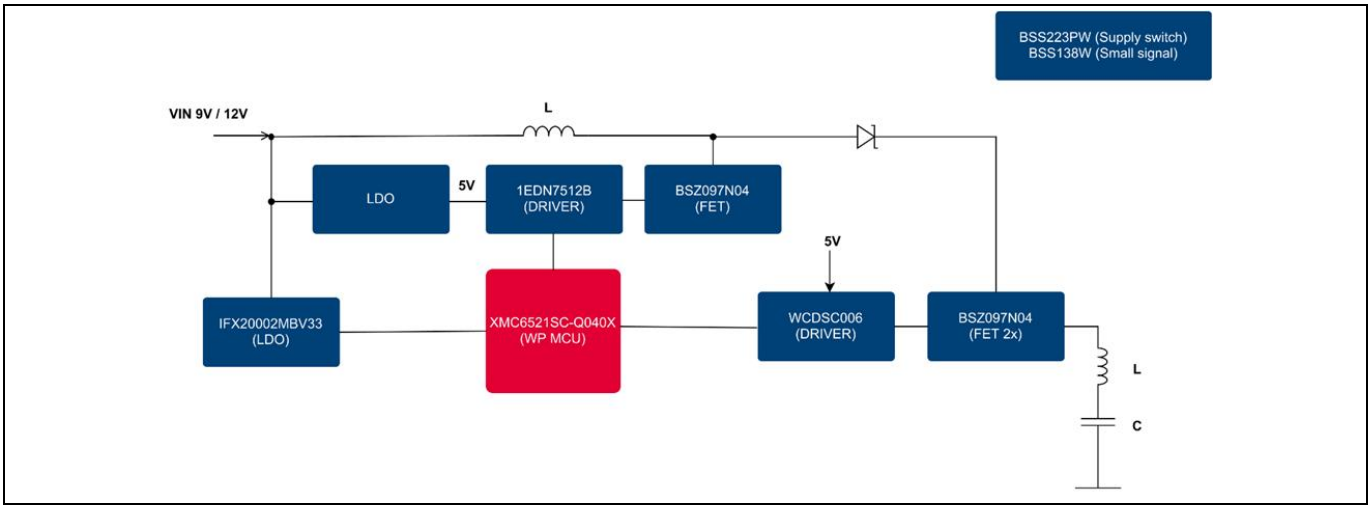

Figure 1 Block diagram – Qi transmitter (Tx)

2 Electrical specifications

Table 1 provides a summary of performance specifications using a Qi-certified 15 W EPP receiver at an ambient temperature of 25°C.

Table 1 Electrical characteristics

Parameter	Symbol	Conditions	Min.	Typ.	Max.	Units
Input voltage	**V_{in}**	R_X output up to 15 W	9		12	V
		R_X output up to 10 W	9		12	V
		R_X output up to 5 W*	5		9	V
Input current	**I_{in}**	V_{in} = 12 V, R_X, I_{out} = 1.25 A		1.5		A
		V_{in} = 9 V, R_X, I_{out} = 0.833 A		1		A
		V_{in} = 9 V, R_X output V_{out} = 5 V, I_{out} = 1 A		0.7		A
Input standby current	**I_{STDY}**	V_{in} = 9 V		10		mA
Switching frequency	**F_{sw}**			127.8		kHz
Efficiency	η	V_{in} = 12 V, R_X, I_{out} = 1.25 A		83		%
t_A	Operation temp	Ambient		25	85	°C

Unless otherwise noted: R_X V_{out} = 12 V, T_A = 25°C, specification is for the reference design and not individual components.

*The current EVM does not support power transmission with a USB 5 V fixed adapter. The reference design as shown in the schematics supports 5 W operation with a USB 5 V adapter.

3 Connector descriptions

Table 2 List of connectors and their functions

Connector	Name	Description
J1	THERM	Thermistor connection (thermistor not populated on board)
J2	UART	UART serial debug interface for use with Spark Connected GUI application
J3	USB	Input supply connection

4 Power supply

The 15 W reference design supports a Q.C. (Quick Charge) 2.0/3.0 power adapter. The maximum transmitter output power will directly correspond to the power output capability of the adapter. Selection of adapters with proper power rating is important to avoid transmitter shut-down or communication disconnection. Table 3 provides recommended power adapter ratings for the maximum receiver power.

Table 3 Adapter requirements

Power rating	Receiver maximum power
24 W	15 W Qi
18 W	10 W
15 W	10 W fast charge, 7.5 W fast charge, 5 W Qi

5 LED behavior

Table 4 LED behavior

LED behavior	Description
Single green flash	One green flash at power-up; indicates system is working properly
Solid green then red	At power-up; incorrect power supply (will not transmit power with 5 V USB adapter)
Solid green	Normal charging; indicates a receiver is on the charging surface
Solid red	Error condition; FOD object detected Error condition; other errors

6 Test set-up

Spark recommends using a certified WPC Qi v1.2 15 W EPP receiver for system evaluation. If a certified WPC v1.2 receiver is not available, a certified WPC v1.1 receiver or newer will also suffice. Use of non-Qi-certified receivers (sometimes called “Qi compatible”) is not recommended, as functionality and performance are not guaranteed. Spark does not support the use of non-certified receivers with the SPK-4102-1C10C.

The transmitter fully complies with WPC v1.2.4 EPP protocol, allowing it to charge all WPC Qi-certified receivers, regardless of power level, up to 15 W receiver output. The following test set-up and testing results reflect the use of a WPC v1.2 EPP receiver.

Equipment required to test the transmitter:

- Qi-certified receiver (15 W EPP recommended)
- Power supply
- Electronic load
- Multimeters or USB power meter to measure input/output voltage and current
- Oscilloscope to measure signal waveforms

Operation of the system:

1. Connect the multimeters as shown in Figure 2, to measure input/output voltage and current
2. Connect the power adapter to J3
   - The status LED will flash green once to indicate the system is working
   - The status LED will turn from green to red if a 5 V fixed USB adapter is used, and the transmitter will halt operation
3. Place the receiver on the charging surface
4. Measure the system parameters
5. If a PC is connected to J2 using a USB-to-UART cable, the user can monitor the transmitter operation through either a serial terminal window or the Spark Connected GUI application. (To download the Spark Connected GUI application, please go to www.sparkconnected.com/consumer.)

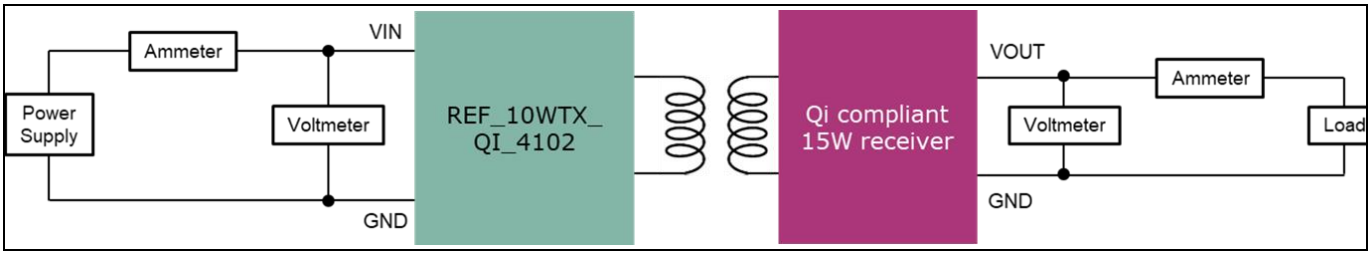

Figure 2 Test equipment set-up

7 Efficiency

Figure 3 shows the DC-DC efficiency of the system when tested with a Würth 760308100111 transmitter coil and a 24 W QC 3.0 power adapter (9 V for 5 W, 12 V for 15 W operation). The Qi-certified 15 W EPP receiver used a 50 mm diameter 10 µH coil with a 1 mm spacer. The tests were performed at receiver outputs of 15 W (12 V output) and an ambient temperature of 25°C.

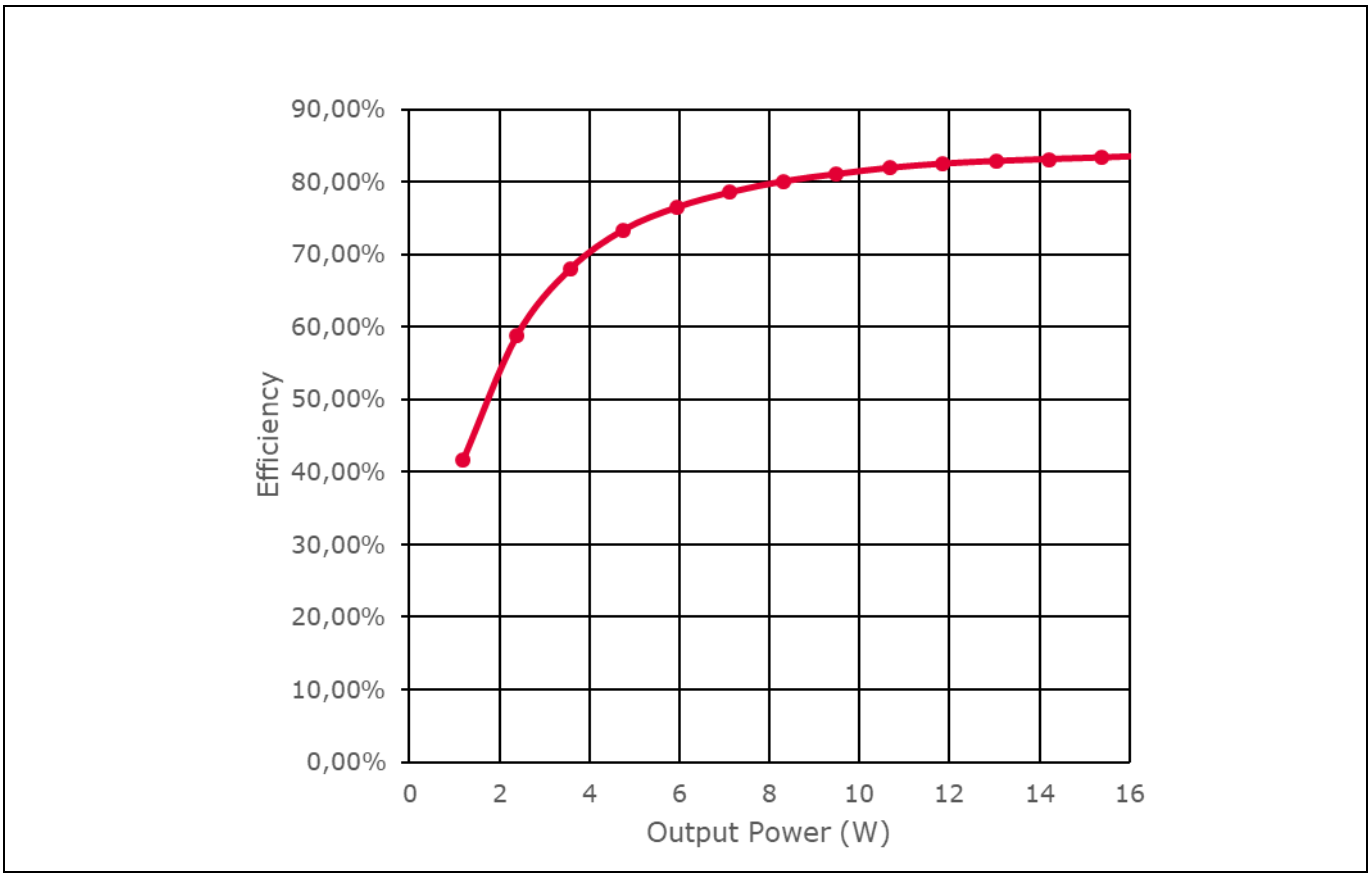

Figure 3 System efficiency

8 Thermal performance

Figure 4 shows the FLIR thermal image for a system when tested with a Qi-certified 15 W EPP receiver with a 50 mm diameter 10 µH coil with a 1 mm spacer. The image was taken at steady-state operation with a receiver output of 15 W. The maximum temperature on the PCB is 49°C, at an ambient temperature of 24°C.

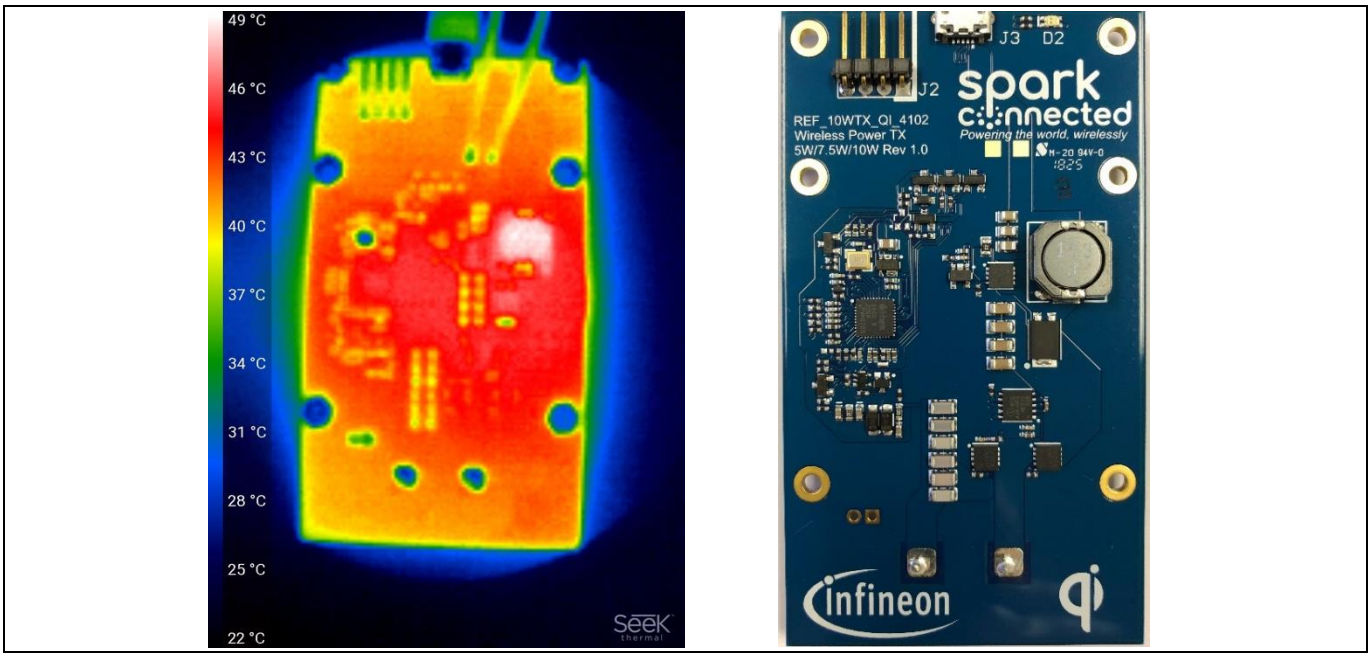

Figure 4 Thermal image

9 Foreign Object Detection (FOD)

Lower transmitter operating frequencies utilized by the WPC Qi standard (110 kHz to 205 kHz) require a safety mechanism to prevent heating of metallic objects within the charging field. These are referred to as “foreign objects” and can be located both inside the device (referred to as “friendly”) and outside the device. Sensing these objects and preventing safety issues is referred to as Foreign Object Detection (FOD). Qi employs two main techniques for FOD.

1. The transmitter performs a Quality Factor (QF) measurement of the coil system when a receiver is placed on the charging surface. If there is a metallic object within the charging field, it will reduce the measured QF value. This method is only enabled by a Qi receiver that supports the v1.2 EPP functionality. At start-up, the receiver sends the transmitter a packet containing the expected QF for the system with a receiver on the charging surface. This QF is compared to the value measured by the transmitter. If the QF measured by the transmitter is below that communicated by the receiver, then a FOD event is triggered and power transfer is stopped. The REF_10WTX_QI_4102 signals the error by turning the LED indicator solid red. The transmitter will maintain the error status until both the receiver and the foreign object are removed from the transmitter surface. At that time the transmitter returns to standby mode.
2. The transmitter performs a power delta calculation during power transfer to determine if excess power is being absorbed by objects other than the receiver. This method is only enabled by a Qi receiver that supports the v1.1 or greater BPP functionality. During power transfer, the receiver sends regular packets reporting the power received, including losses in the receiver system (coil, rectifier, voltage regulator). The transmitter measures power output, including losses in the transmitter system (coil, bridge, voltage regulator, other fixed losses). The transmitter then subtracts received power from transmitted power, and if transmitted power is greater than received power by more than a certain margin, a FOD event is triggered and power transfer is stopped. The REF_10WTX_QI_4102 signals the error by turning the LED indicator solid red. The transmitter will maintain the error status until both the receiver and the foreign object are removed from the transmitter surface. At that time the transmitter returns to standby mode.

Since both FOD methods rely on information from the Qi receiver, the accuracy of the data provided by the receiver is critical to effective metallic object detection.

The REF_10WTX_QI_4102 also performs other real-time measurements of AC coil voltage, AC coil current, system efficiency, and thermal input from any attached thermistors. Using these inputs, the system ensures safe and stable power delivery as environmental changes occur. If an error condition is detected, the SPI-4102-1C10C signals the error by turning the LED indicator solid red. To return the system to standby, the user is required to address the cause of the error.

10 Schematics

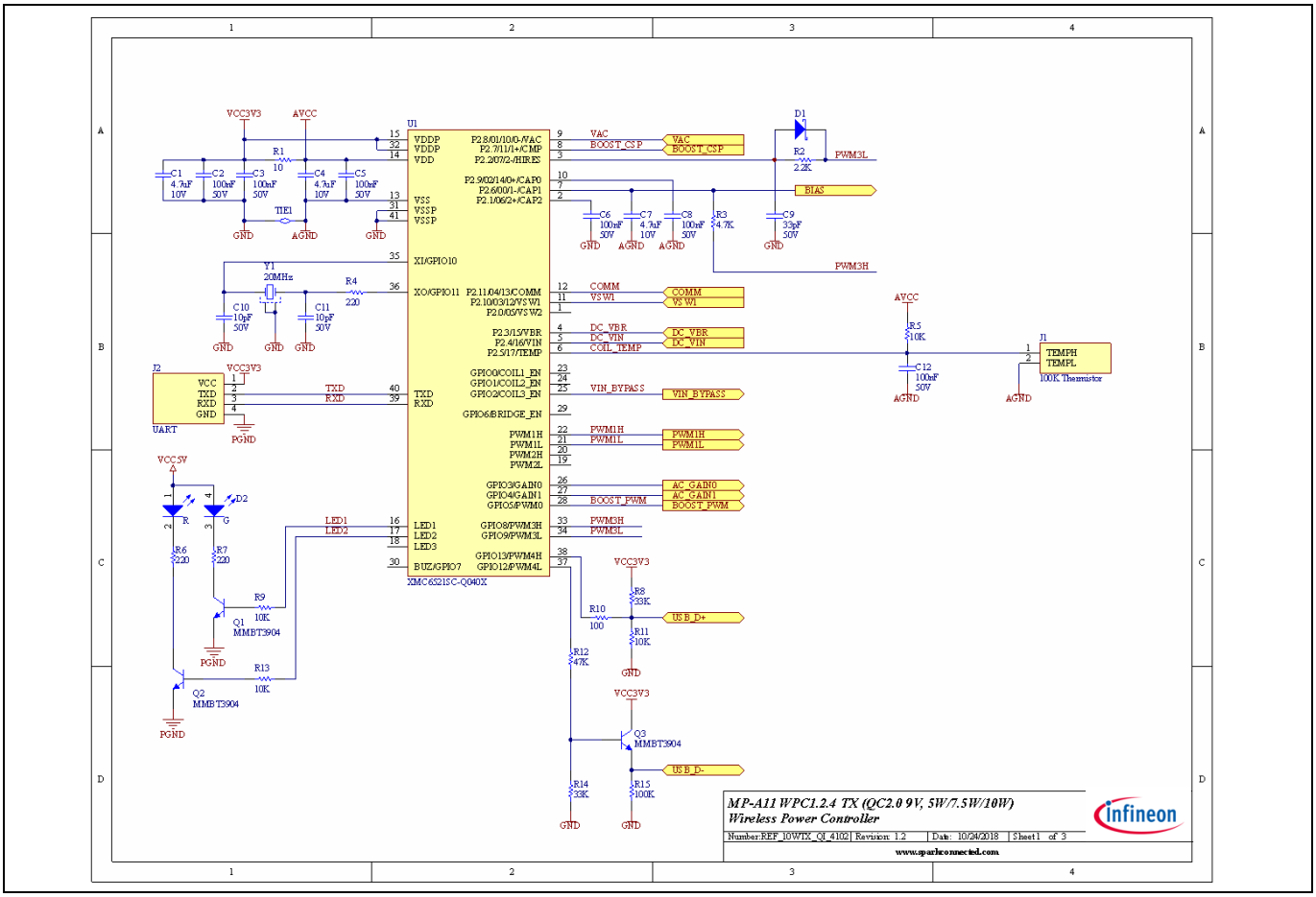

Schematics

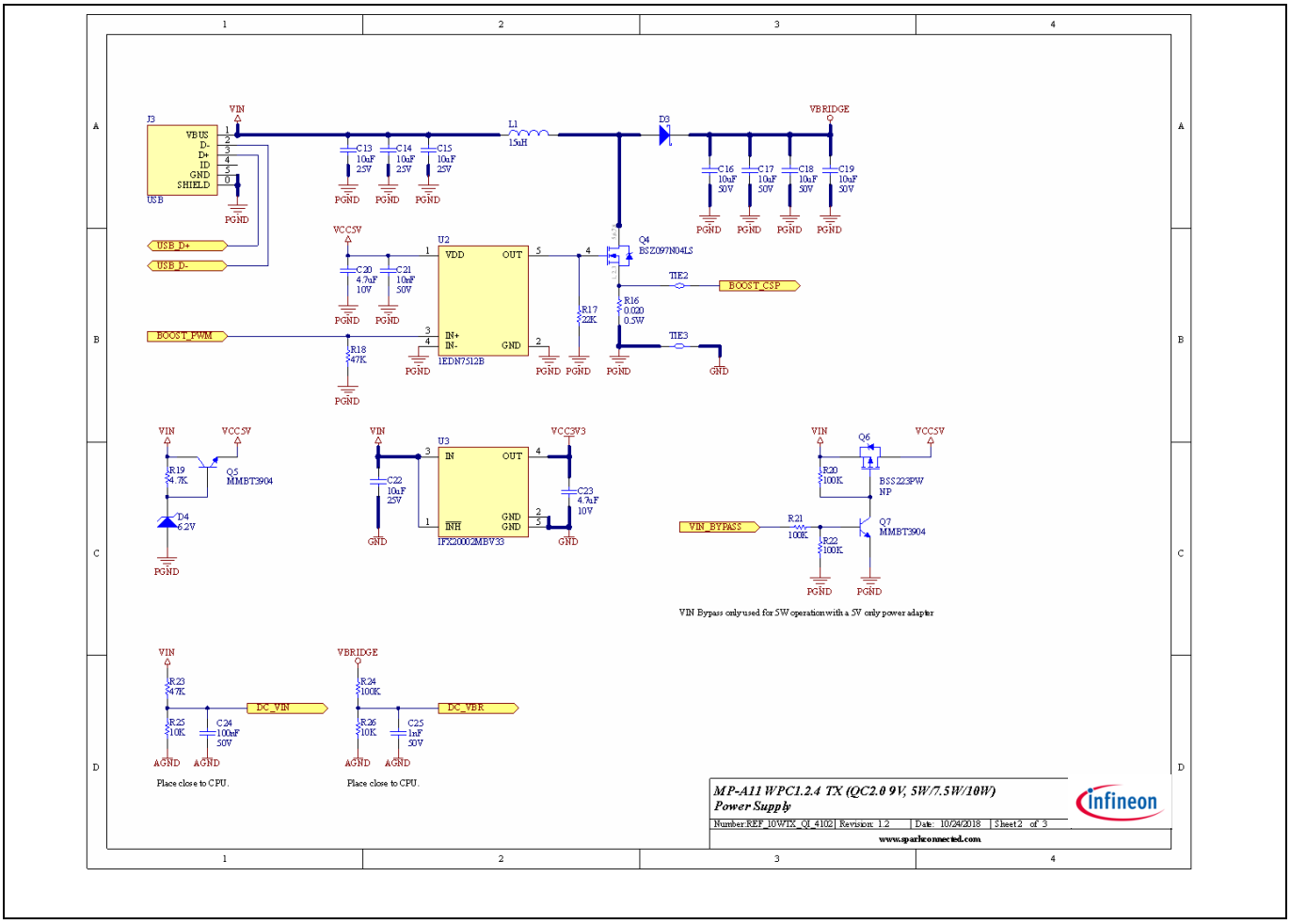
J3
USB
VIN
VBRIDGE
L1
15uH
D3
C13 10uF 25V
C14 10uF 25V
C15 10uF 25V
C16 10uF 50V
C17 10uF 50V
C18 10uF 50V
C19 10uF 50V
PGND
USB_D+
USB_D-
VCC5V
U2
1EDN7512B
VDD
OUT
IN+
IN-
GND
C20 4.7uF 10V
C21 10uF 50V
Q4
BSZ097N04LS
TIE2
BOOST_CSP
R16 0.020 0.5W
R17 22K
TIE3
BOOST_PWM
R18 47K
R19 4.7K
Q5 MMBT3904
D4 6.2V
U3
IFX20002MBV33
C22 10uF 25V
VCC3V3
C23 4.7uF 10V
Q6
BSS223PW NP
R20 100K
VIN_BYPASS
R21 100K
R22 100K
Q7 MMBT3904
VIN Bypass only used for 5W operation with a 5V only power adapter
R23 4.7K
DC_VIN
R25 10K
C24 100nF 50V
AGND
Place close to CPU.
R24 100K
DC_VBR
R26 10K
C25 1nF 50V
MP-A11 WPC1.2.4 TX (QC2.0 9V, 5W/7.5W/10W)
Power Supply
Number:REF_10WTX_QI_4102 | Revision: 1.2 | Date: 10/24/2018 | Sheet 2 of 3
www.sparkconnected.com

Schematics

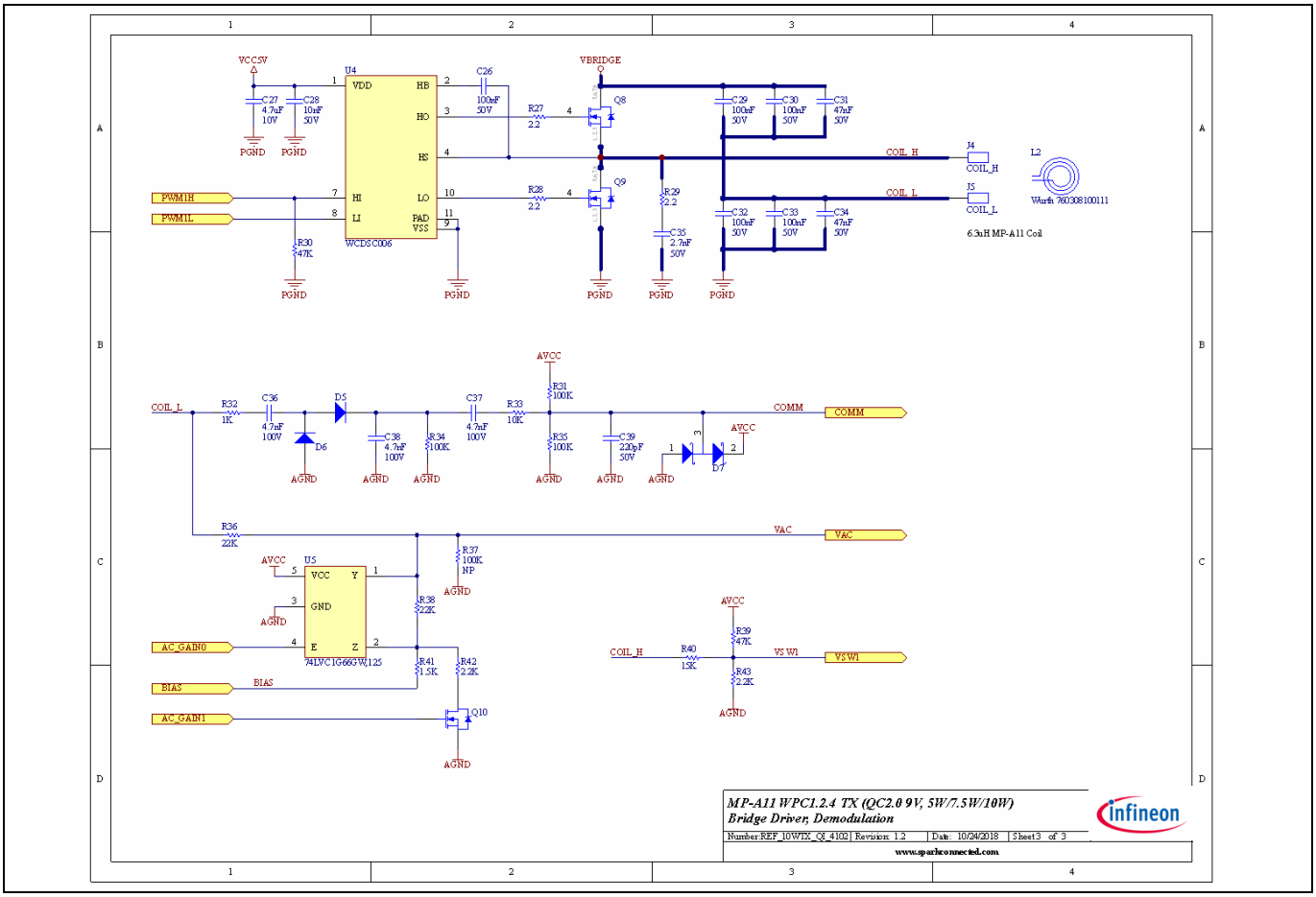

Figure 5 Schematics

11 Bill of Materials

Table 5 provides a list of components and their functions

Table 5 BOM

Designator	Value	Rating	Part number	Manufacturer	Qty	Description
C1, C4, C7, C20, C23, C27	4.7 µF	10 V			6	Ceramic capacitor
C2, C3, C5, C6, C8, C12, C24, C26	100 nF	50 V			8	Ceramic capacitor
C9	33 pF	50 V	885012005058	Würth Elektronik	1	Ceramic capacitor
C10, C11	10 pF	50 V	885012005055	Würth Elektronik	2	Ceramic capacitor
C13, C14, C15, C22	10 µF	25 V	GRM21BR61E106KA73L	Murata	4	Ceramic capacitor
C16, C17, C18, C19	10 µF	50 V	CL31B106KBHNNNE 885012108022	Samsung Würth Elektronik	4	Ceramic capacitor
C21, C28	10 nF	50 V	885012205067	Würth Elektronik	2	Ceramic capacitor
C25	1 nF	50 V	885012205061	Würth Elektronik	1	Ceramic capacitor
C29, C30, C32, C33	100 nF	50 V	GRM31C5C1H104JA01K	Murata	4	Ceramic capacitor
C31, C34	47 nF	50 V	GRM31M5C1H473JA01K	Murata	2	Ceramic capacitor
C35	2.7 nF	50 V	885012205063	Würth Elektronik	1	Ceramic capacitor
C36, C37, C38	4.7 nF	100 V	C0603C472M1GEC7867 885012206112	Kemet Würth Elektronik	3	Ceramic capacitor
C39	220 pF	50 V	885012205057	Würth Elektronik	1	Ceramic capacitor
D1	30 V		DB2S31400L	Panasonic	1	Schottky diode
D2			APHBM2012SURKCGKC	Kingbright	1	Dual color LED
D3	60 V		MBR860STR	SMC	1	Schottky diode
D4	6.2 V		MM3Z6V2ST1G	ON Semiconductor	1	Zener diode
D5, D6			BAS21GWJ	Nexperia	2	Diode
D7			SBAS70-04LT1G	ON Semiconductor	1	Schottky diode

J2			M20-9960445 61300411021	Harwin Würth Elektronik	1	UART four-pin connector 90 degrees
J3			10118194-0001LF 629105150521	Amphenol Würth Elektronik	1	USB micro-B connector
L1	15 µH	3.4 A	MSS1048-153 7447714150	Coilcraft Würth Elektronik	1	Inductor
L2	6.3 µH		760308100111 WT505090-10F2-A11-G1	Würth Elektronik TDK	1	Wireless power coil MP-A11
Q1, Q2, Q3, Q5, Q7			MMBT3904,215	Nexperia	5	NPN transistor
Q4, Q8, Q9			BSZ097N04LSGATMA1	Infineon	3	N-channel FET
Q6			BSS223PWH6327XTSA1	Infineon	1	P-channel FET
Q10			BSS138WH6433XTMA1	Infineon	1	N-channel FET
R1	10				1	Chip resistor
R2	2.2 K				1	Chip resistor
R3	4.7 K	1 percent			1	Chip resistor
R4, R6, R7	220				3	Chip resistor
R5, R11, R25, R26	10 K	1 percent			4	Chip resistor
R8, R14	33 K	1 percent			2	Chip resistor
R9, R13, R33	10 K				3	Chip resistor
R10	100	1 percent			1	Chip resistor
R12, R23, R39	47 K	1 percent			3	Chip resistor
R15, R24	100 K	1 percent			3	Chip resistor
R16	0.020	0.5 W	RUK2012JR020CS	Samsung	1	Chip resistor
R17	22 K				1	Chip resistor
R18, R30	47 K				2	Chip resistor
R19	4.7 K				1	Chip resistor
R20, R21, R22, R31, R35	100 K				5	Chip resistor
R27, R28, R29	2.2				3	Chip resistor
R32	1 K				1	Chip resistor
R34	100 K				1	Chip resistor

R36, R38	22 K	1 percent			1	Chip resistor
R40	15 K	1 percent			1	Chip resistor
R41	1.5 K	1 percent			1	Chip resistor
R42, R43	2.2 K	1 percent			2	Chip resistor
U1			XMC6521SC-Q040X	Infineon	1	Wireless power controller
U2			1EDN7512BXTSA1	Infineon	1	FET driver
U3			IFX20002MBV33HTSA1	Infineon	1	LDO (3.3 V)
U4			WCDSC006	Infineon	1	FET driver (5 V supply with 3.3 V to 5 V MCU interface)
U5			74LVC1G66GW,125	Nexperia	1	Analog switch
Y1	20 MHz		FA-238 20.0000MB-K0	Epson	1	Crystal

12 Appendix A

Qi v1.2.4 certification document.



Figure 6 Certificate of registration

TERMS AND CONDITIONS FOR EVALUATION MODULES FROM SPARK CONNECTED

1. Delivery. Spark Connected (“Spark”) delivers Spark evaluation boards, kits, or modules, including any accompanying demonstration software, components, or documentation (collectively, an “EVM” or “EVMs”) to the User (“User”) in accordance with the terms and conditions set forth herein. Acceptance of the EVM is expressly subject to the following terms and conditions:
    a. EVMs are intended solely for product or software developers for use in a research and development setting for feasibility evaluation, experimentation, or scientific analysis of the Spark reference design. EVMs have no direct function and are not finished products. EVMs shall not be directly or indirectly assembled as a part or subassembly in any finished product.
    b. EVMs are not intended for consumer or household use. EVMs may not be sold, sublicensed, leased, rented, loaned, assigned, or otherwise distributed for commercial purposes by Users, in whole or in part, or used in any finished product or production system.
2. Limited Warranty. If any EVM fails to conform to Spark’s published specifications, Spark may, at its option, repair or replace such EVM. If Spark elects to repair or replace such EVM, Spark shall have a reasonable time to repair the EVM or provide replacements. Notwithstanding the foregoing, Spark shall not be liable for any defects that are caused by neglect, misuse, or mistreatment by an entity other than Spark, including improper installation or testing, or for any EVMs that have been altered or modified in any way by an entity other than Spark. Moreover, Spark shall not be liable for any defects that result from User’s design, specifications or instructions for such EVMs. Testing and other quality control techniques are used to the extent Spark deems necessary or as mandated by government requirements. Spark does not test all parameters of each EVM.
3. EVM Use Restrictions and Warnings:
    a. EVMS ARE NOT FOR USE IN FUNCTIONAL SAFETY AND/OR SAFETY CRITICAL EVALUATIONS, INCLUDING BUT NOT LIMITED TO EVALUATIONS OF LIFE SUPPORT APPLICATIONS.
    b. User must read and apply the user guide and other available documentation provided by Spark regarding the EVM prior to handling or using the EVM, including without limitation any warning or restriction notices.
    c. Safety-Related Warnings and Restrictions:
        i. User shall operate the EVM within Spark’s recommended specifications and environmental considerations stated in the user guide, other available documentation provided by Spark, and any other applicable requirements and employ reasonable and customary safeguards. Exceeding the specified performance ratings and specifications (including but not limited to input and output voltage, current, power, and environmental ranges) for the EVM may cause personal injury or death, or property damage. If there are questions concerning performance ratings and specifications, User should contact Spark prior to connecting interface electronics including input power and intended loads. Any loads applied outside of the specified output range may also result in unintended and/or inaccurate operation and/or possible permanent damage to the EVM and/or interface electronics. Please consult the EVM user guide prior to connecting any load to the EVM output. If there is uncertainty as to the load specification, please contact Spark. During normal operation, even with the

inputs and outputs kept within the specified allowable ranges, some circuit components may have elevated case temperatures. When testing the EVM, please be aware that the EVM may become very warm.

ii. EVMs are intended solely for use by technically qualified, professional electronics experts who are familiar with the dangers and application risks associated with handling electrical mechanical components, systems, and subsystems. User assumes all responsibility and liability for proper and safe handling and use of the EVM by User or its employees, affiliates, contractors, or designees. User assumes all responsibility and liability to ensure that any interfaces (electronic and/or mechanical) between the EVM and any human body are designed with suitable isolation and means to safely minimize the risk of electrical shock hazard. User assumes all responsibility and liability for any improper or unsafe handling or use of the EVM by User or its employees, affiliates, contractors, or designees.

d. User assumes all responsibility and liability for compliance to any applicable international, federal, state, or local laws and regulations related to User's handling and use of the EVM. User assumes all responsibility and liability for proper disposal and recycling of the EVM consistent with all applicable international, federal, state, and local requirements.

4. Accuracy of Information. Spark attempts to be as accurate as possible when providing information regarding the EVM. However, Spark does not warrant the accuracy of EVM descriptions, documentation, or other information as accurate, complete, reliable, current, or error-free.
5. Disclaimers:
    a. DISCLAIMER OF WARRANTY. EVMS AND ANY DOCUMENTATION PROVIDED WITH THE EVM BY SPARK ARE PROVIDED "AS IS", WITHOUT WARRANTIES OF ANY KIND FROM SPARK, EITHER EXPRESS OR IMPLIED. TO THE FULLEST EXTENT POSSIBLE PURSUANT TO APPLICABLE LAW, SPARK DISCLAIMS ALL WARRANTIES EXPRESS, IMPLIED, OR STATUTORY, INCLUDING, BUT NOT LIMITED TO, IMPLIED WARRANTIES OF MERCHANTABILITY, FITNESS FOR A PARTICULAR PURPOSE, RELIABILITY OR AVAILABILITY, ACCURACY, LACK OF VIRUSES, QUIET ENJOYMENT, NON-INFRINGEMENT OF THIRD-PARTY RIGHTS (INCLUDING THIRD-PARTY INTELLECTUAL PROPERTY RIGHTS), OR OTHER VIOLATION OF RIGHTS. NO ADVICE OR INFORMATION, WHETHER ORAL OR WRITTEN, OBTAINED BY YOU FROM SPARK OR ITS AFFILIATES SHALL BE DEEMED TO ALTER THIS DISCLAIMER BY SPARK OF WARRANTY REGARDING THE SOFTWARE, OR TO CREATE ANY WARRANTY OF ANY SORT FROM SPARK.
    b. NOTHING IN THESE TERMS AND CONDITIONS SHALL BE CONSTRUED AS GRANTING OR CONFERRING ANY RIGHTS BY LICENSE, PATENT, OR ANY OTHER INDUSTRIAL OR INTELLECTUAL PROPERTY RIGHT OF SPARK, ITS SUPPLIERS/LICENSORS, OR ANY OTHER THIRD PARTY.
6. USER'S INDEMNITY OBLIGATIONS AND REPRESENTATIONS. USER WILL DEFEND, INDEMNIFY AND HOLD SPARK, ITS LICENSORS AND THEIR REPRESENTATIVES HARMLESS FROM AND AGAINST ANY AND ALL CLAIMS, DAMAGES, LOSSES, EXPENSES, COSTS, AND LIABILITIES (COLLECTIVELY, "CLAIMS") ARISING OUT OF OR IN CONNECTION WITH ANY HANDLING OR USE OF THE EVM THAT IS NOT IN ACCORDANCE WITH THESE TERMS AND CONDITIONS. THIS OBLIGATION SHALL APPLY WHETHER CLAIMS ARISE UNDER STATUTE, REGULATION, OR THE LAW OF TORT, CONTRACT, OR ANY OTHER LEGAL THEORY, AND EVEN IF THE EVM FAILS TO PERFORM AS DESCRIBED OR EXPECTED.
7. LIMITATION OF LIABILITY. SPARK WILL NOT BE LIABLE FOR ANY DAMAGES OF ANY KIND ARISING

OUT OF OR RELATING TO THE USE OR THE INABILITY TO USE THE DEVICE, THE SOFTWARE, OR ITS CONTENT OR FUNCTIONALITY, INCLUDING BUT NOT LIMITED TO DAMAGES CAUSED BY OR RELATED TO ERRORS, OMISSIONS, INTERRUPTIONS, DEFECTS, DELAY IN OPERATION OR TRANSMISSION, COMPUTER VIRUS, FAILURE TO CONNECT, NETWORK CHARGES, AND ALL OTHER DIRECT, INDIRECT, SPECIAL, INCIDENTAL, EXEMPLARY, OR CONSEQUENTIAL DAMAGES EVEN IF SPARK HAS BEEN ADVISED OF THE POSSIBILITY OF SUCH DAMAGES. NOTWITHSTANDING THE FOREGOING, SPARK'S TOTAL LIABILITY TO YOU FOR ALL LOSSES, DAMAGES, CAUSES OF ACTION, INCLUDING BUT NOT LIMITED TO THOSE BASED ON CONTRACT, TORT, OR OTHERWISE, ARISING OUT OF YOUR USE OF THE EVM OR THIRD-PARTY APPLICATIONS ON THE DEVICE, OR ANY OTHER PROVISION OF THIS AGREEMENT, SHALL NOT EXCEED THE AMOUNT YOU PAID SPECIFICALLY FOR THE PRODUCT. THE FOREGOING LIMITATIONS, EXCLUSIONS, AND DISCLAIMERS SHALL APPLY TO THE MAXIMUM EXTENT PERMITTED BY APPLICABLE LAW, EVEN IF ANY REMEDY FAILS ITS ESSENTIAL PURPOSE.

Applicable Law. This Agreement is governed by and construed in accordance with the laws of the state of Texas in the United States of America, excluding any choice of law rules that may direct application of laws of another jurisdiction. The exclusive venue and forum for any action brought in connection with this Agreement will be any state or federal court located in Dallas County, Texas.

13 Revision history

Document version	Date of release	Description of changes

Trademarks
All referenced product or service names and trademarks are the property of their respective owners.

Edition 2019-01-20

Published by

Infineon Technologies AG

81726 Munich, Germany

© 2019 Infineon Technologies AG. All Rights Reserved.

Do you have a question about this document?

Email: erratum@infineon.com

Document reference
ER_1811_PL88_1812_085846

IMPORTANT NOTICE

The information contained in this application note is given as a hint for the implementation of the product only and shall in no event be regarded as a description or warranty of a certain functionality, condition or quality of the product. Before implementation of the product, the recipient of this application note must verify any function and other technical information given herein in the real application. Infineon Technologies hereby disclaims any and all warranties and liabilities of any kind (including without limitation warranties of non-infringement of intellectual property rights of any third party) with respect to any and all information given in this application note.

The data contained in this document is exclusively intended for technically trained staff. It is the responsibility of customer's technical departments to evaluate the suitability of the product for the intended application and the completeness of the product information given in this document with respect to such application.

For further information on the product, technology, delivery terms and conditions and prices please contact your nearest Infineon Technologies office (**www.infineon.com**).

WARNINGS

Due to technical requirements products may contain dangerous substances. For information on the types in question please contact your nearest Infineon Technologies office.

Except as otherwise explicitly approved by Infineon Technologies in a written document signed by authorized representatives of Infineon Technologies, Infineon Technologies' products may not be used in any applications where a failure of the product or any consequences of the use thereof can reasonably be expected to result in personal injury.