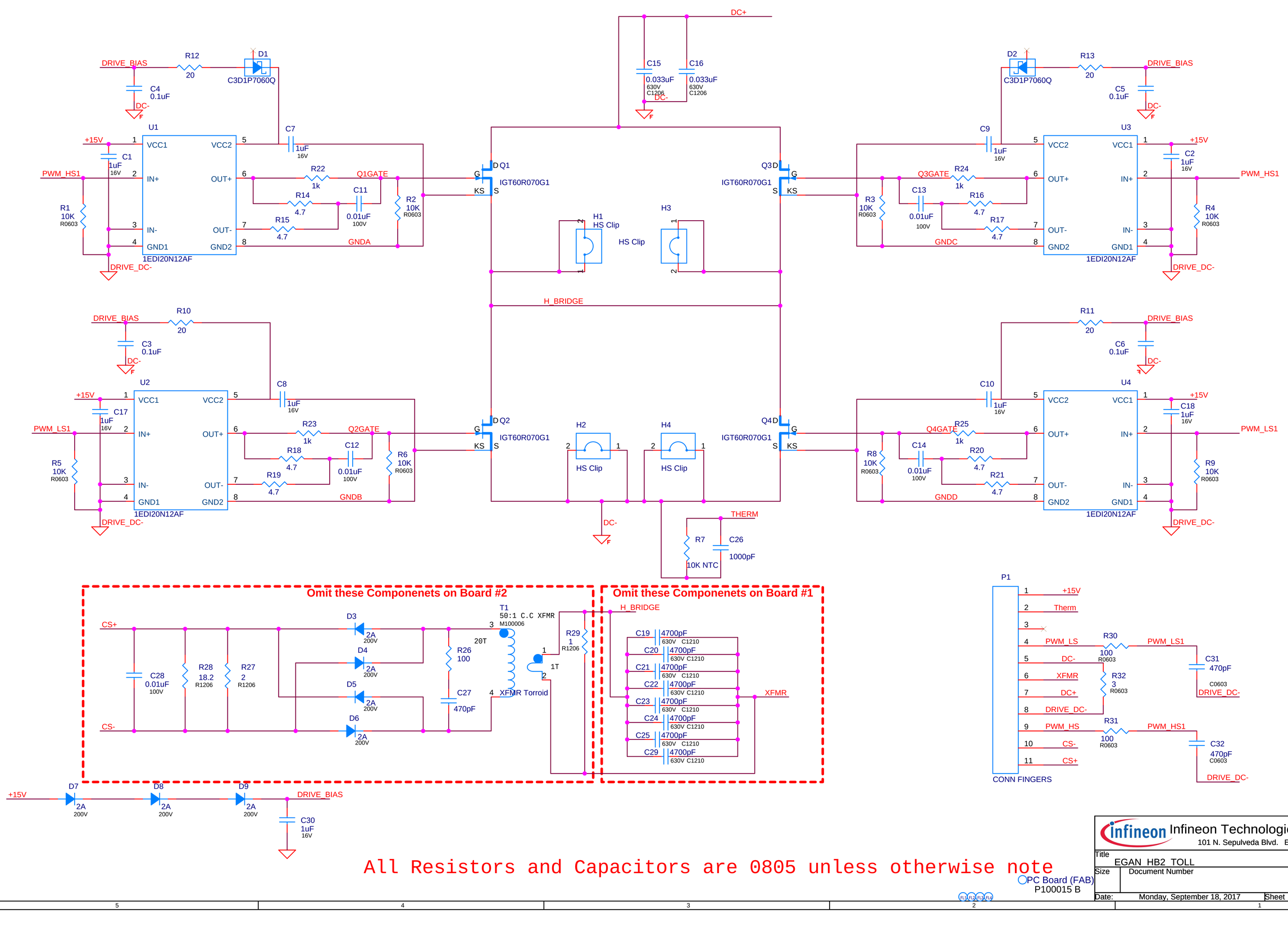
DC+
C15
0.033uF
630V
C1206
C16
0.033uF
630V
C1206
DC-
DRIVE_BIAS
R12
20
D1
C3D1P7060Q
C4
0.1uF
U1
+15V
C1
1uF
16V
PWM_HS1
R1
10K
R0603
VCC1
IN+
IN-
GND1
VCC2
OUT+
OUT-
GND2
1EDI20N12AF
DRIVE_DC-
C7
1uF
16V
R22
1k
Q1GATE
R14
4.7
C11
0.01uF
100V
R15
4.7
R2
10K
R0603
GNDA
Q1
IGT60R070G1
G
D
KS
S
H1
HS Clip
H3
HS Clip
H_BRIDGE
Q3
IGT60R070G1
D2
C3D1P7060Q
R13
20
C5
0.1uF
C9
1uF
16V
U3
Q3GATE
R24
1k
C13
0.01uF
100V
R16
4.7
R17
4.7
R3
10K
R0603
GNDC
R4
10K
R0603
PWM_HS1
DRIVE_BIAS
R10
20
C3
0.1uF
U2
C17
1uF
16V
PWM_LS1
R5
10K
R0603
C8
1uF
16V
R23
1k
Q2GATE
R18
4.7
C12
0.01uF
100V
R19
4.7
R6
10K
R0603
GNDB
Q2
IGT60R070G1
H2
HS Clip
H4
HS Clip
Q4
IGT60R070G1
DC-
THERM
R7
10K NTC
C26
1000pF
R11
20
C6
0.1uF
U4
C10
1uF
16V
Q4GATE
R25
1k
C14
0.01uF
100V
R20
4.7
R21
4.7
R8
10K
R0603
GNDD
C18
1uF
16V
R9
10K
R0603
PWM_LS1
Omit these Componenets on Board #2
CS+
CS-
C28
0.01uF
100V
R28
18.2
R1206
R27
2
R1206
D3
D4
D5
D6
2A
200V
T1
50:1 C.C XFMR
M100006
20T
R26
100
C27
470pF
XFMR Torroid
R29
1
R1206
1T
Omit these Componenets on Board #1
H_BRIDGE
C19
C20
C21
C22
C23
C24
C25
C29
4700pF
630V C1210
XFMR
P1
CONN FINGERS
+15V
Therm
PWM_LS
DC-
XFMR
DC+
DRIVE_DC-
PWM_HS
CS-
CS+
R30
100
R0603
R32
3
R0603
R31
100
R0603
C31
470pF
C0603
C32
470pF
C0603
D7
D8
D9
C30
1uF
16V
All Resistors and Capacitors are 0805 unless otherwise note
PC Board (FAB)
P100015 B
Infineon Technologies Americas Corp.
101 N. Sepulveda Blvd. El Segundo, California 90245
Title
EGAN_HB2_TOLL
eGaN_HB_TOLL
eGaN_HB2_TOLL
Size
Document Number
Rev
B
Date: Monday, September 18, 2017
Sheet 1 of 1