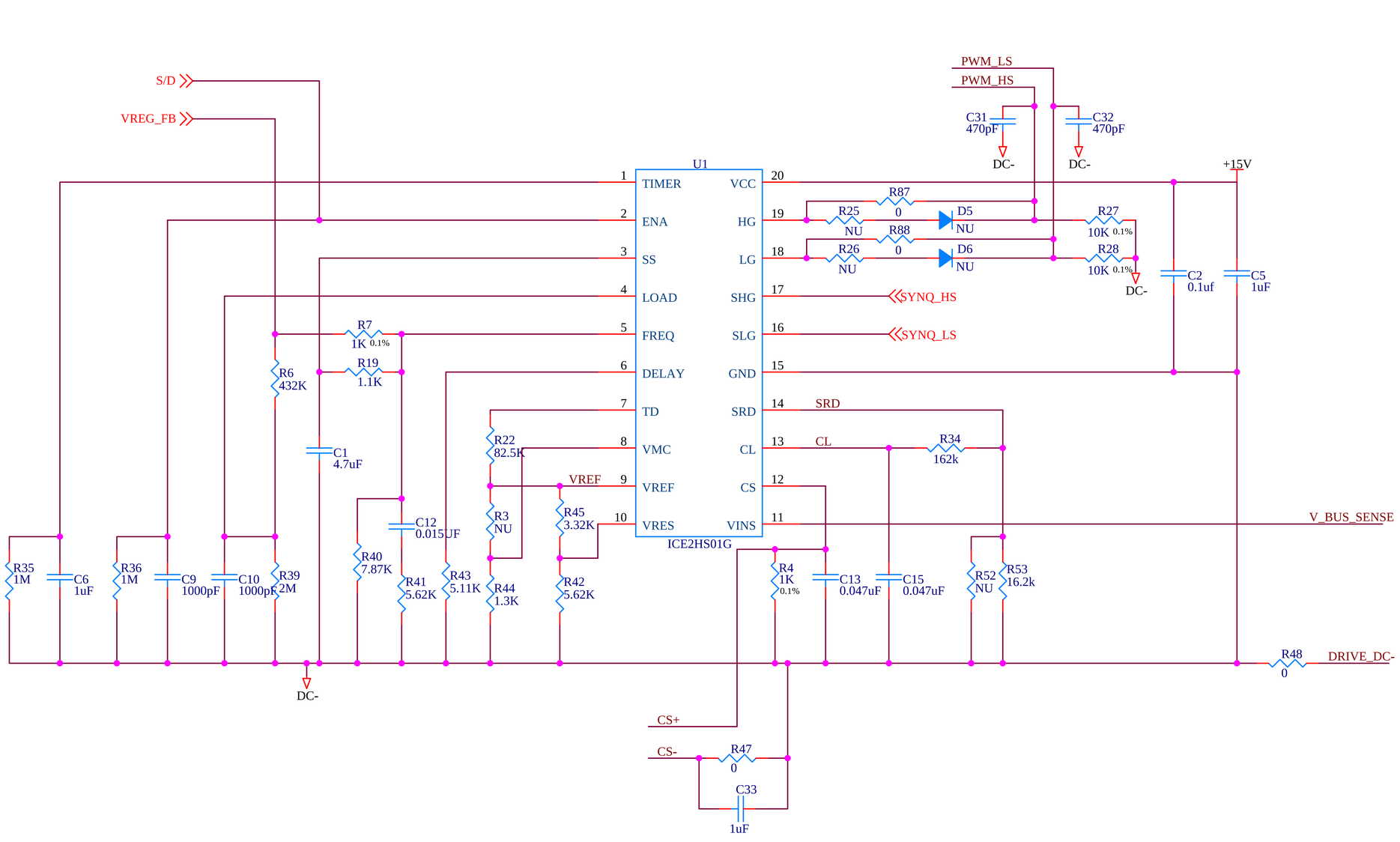
S/D
VREG_FB
U1
TIMER
ENA
SS
LOAD
FREQ
DELAY
TD
VMC
VREF
VRES
VCC
HG
LG
SHG
SLG
GND
SRD
CL
CS
VINS
ICE2HS01G
PWM_LS
PWM_HS
C31 470pF
C32 470pF
DC-
+15V
R87
R25 0 NU
D5 NU
R88
R26 0 NU
D6 NU
R27 10K 0.1%
R28 10K 0.1%
C2 0.1uf
C5 1uF
SYNQ_HS
SYNQ_LS
R7 1K 0.1%
R19 1.1K
R6 432K
C1 4.7uF
R22 82.5K
R3 NU
R45 3.32K
R34 162k
V_BUS_SENSE
C12 0.015UF
R40 7.87K
R41 5.62K
R43 5.11K
R44 1.3K
R42 5.62K
R4 1K 0.1%
C13 0.047uF
C15 0.047uF
R52 NU
R53 16.2k
R35 1M
C6 1uF
R36 1M
C9 1000pF
C10 1000pF
R39 2M
R48 0
DRIVE_DC-
CS+
CS-
R47 0
C33 1uF
NOT ASSEMBLED
SRD
VREF
R1 NU
Q2 NU
CL
R2 NU
Q1 NU
P4
+15V
DC-
PWM_HS
PWM_LS
DRIVE_DC-
V_BUS_SENSE
CS+
CS-
THERM
SEC_TEMP
+12V
RTN
+48VOUT
SEC_SYNQ_LS
SEC_SYNQ_HS
SEC_CS+
SEC_CS-
IFAULT
RTN_DRIVE
PRIMARY SIDE
SECONDARY SIDE
LLC Main Bd
PC Board (FAB)
P100006 C
Infineon Technologies Americas Corp.
101 N. Sepulveda Blvd. El Segundo, California 90245
Title
LLC3KW_CONTROL
LLC3kW_Control
Control1
Size
Document Number
Rev
C
Date:
Friday, January 05, 2018
Sheet 1 of 2

THERM
V_BUS_SENSE
SEC_TEMP
+12V
RTN
+48VOUT
SEC_SYNQ_LS
SEC_SYNQ_HS
SEC_CS+
SEC_CS-
IFAULT
RTN_DRIVE

SECONDARY SYNQ GATE DRIVE

+15V
R56 2.87K
R57 2.87K
U2
ACPL-K73L
A1
C1
A2
C2
VCC
VO1
VO2
GND
C18 0.1uF
+12V
R61 511
Z1 5.6V
RTN_DRIVE
R89 5.11
SEC_SYNQ_LS
R90 5.11
SEC_SYNQ_HS
R10 10K 0.1%
R11 10K 0.1%
R62 10
C19 0.1uF
RTN
SYNQ_LS
SYNQ_HS
R49 249
D1 MMBD4448 75V 250mA
R54 4.75K
Q3 2N7002E
R50 249
D2 MMBD4448 75V 250mA
R55 4.75K
Q4 2N7002E
R9 10K 0.1%
C17 100pF
C16 100pF
R8 10K 0.1%
DC-

DC_OK LED

+48VOUT
+12V
Z4 33V
R63 3.32k
D3 GREEN
R12 10K 0.1%
Q5 2N7002E
R13 10K 0.1%
RTN

OUTPUT CONTROL LOOP

+48VOUT
+12V
R17 221
Z5 10V
R21 4.32K
R94 NU
R95 200
VREG_FB
R93 2k
C11 1000pF
U4
PS2561L-1A
R30 5.11K
C25
C24 470pF
R31 619
C26 0.022uF
R32 2k
R71 10K 0.1%
R51 10K 0.1%
U6B
LM358
SEC_REF
R72 1K 0.1%
RTN
DC-

THERMAL PROTECTION

+15V
R29 2k
R68 100K
R65 4.02k
R66 40.2K
Z2 5.1V
THERM
U3A
LM393
C20 0.1uF
R15 10K 0.1%
C35 1000pF
R79 11K
C14 0.1uF
C34 0.1uF
R91 43.2K
U3B
LM393
DC-

FAULT LED

+15V
R78 6.81K
U8 RED
Q9 2N7002E
V_BUS_SENSE
S/D
R80 1K
D7
100ma
OPTO
R46 9.09K
C28 0.01UF
Q10 2N7002E
R70 100K
DC-

INPUT OK LED

+15V
R77 6.81K
D4 GREEN
DC-

INPUT VOLTAGE DETECTION

OUTPUT OVER CURRENT LATCH OFF

+15V
R18 10K 0.1%
U5
PS2561L-1A
IFAULT
+12V
R81 1K 0.1%
R86 2.21k
Z3 5.1V
RTN

OUTPUT OVP

VREF_5V
R38 1M
U7C
LM339
R23 61.9K
U7D
LM339
R24 66.5K
C29 0.01UF
+48VOUT
R67 47.5K 0.1%
R33 2k
C30 0.01UF
RTN

+12V
R64 2.21K
VREF_5V
R58 3.32k
VR1 TL431
C3 0.1uf
R59 3.32k
RTN

SOFT START REF

+12V
R20 22.1K
R14 10K 0.1%
SEC_REF
VR2 TL431
C23 10uF
Q6 2N7002E
Q7 2N7002E
IFAULT
C37 0.1uF
Q11 2N7002E
R92 16.2K
RTN

VREF_5V
R37 1M
R73 43.2K
IFAULT
U7B
LM339
R60 100
OUTPUT_CS
C27 0.01UF
R69 210K
C4 0.1uf
RTN

SECONDARY CURRENT LIMIT

SEC_CS+
R82 0
D8 BAT54
SEC_CS-
R83 0
C36 1uF
R84 1M
RTN

R5 100K
VREF_5V
+12V
C21 0.1uF
U7A
LM339
R74 40.2K
R76 4.02k
R16 100
SEC_TEMP
IFAULT
C7 0.1uF
R75 11K
C8 1000pF
RTN

THERMAL PROTECTION SEC

Infineon Technologies Americas Corp.
101 N. Sepulveda Blvd. El Segundo, California 90245

Title	LLC3KW_CONTROL	LLC3kW_Control Control2
Size	Document Number	Rev C
Date:	Monday, January 29, 2018	Sheet 2 of 2