Assembly_Top

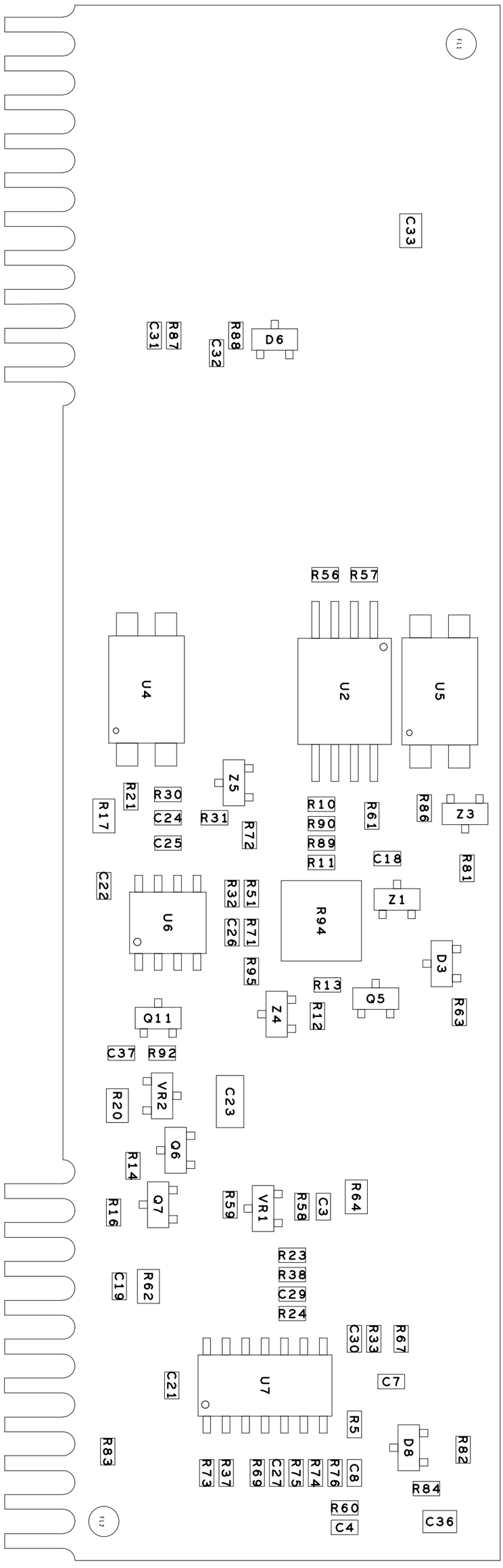

FL1

C33
1uF

U5
PS2561L-1A

U2
ACPL-K73L

5.1V Z3
R81 1K
R86 2.21k
GREEN D3
R63 3.32K
C18 0.1uF
Z1 5.6V
Q5 2N7002E
R61 511
2.87K R57
2.87K R56
10K R10
5.11 R90
5.11 R89
10K R11
R94 NU
10K R13
10K R12
33V Z4
10V Z5
R72 1K
10K R51
10K R71
200 R95
R32 2k
C26 0.022uF
R31 619
5.11K R30
C24 0.047uF
C25 470pF
R21 4.32K
R17 221
C22 0.1uF
U6
LM358
Q11 2N7002E
16.2k R92
C37 0.1uF

D6 NU
0 R88
C32 470pF
0 R87
C31 470pF

C23 10uF
TL431 VR1
R59 3.32K
TL431 VR2
2N7002E Q6
2N7002E Q7
R14 10K
R20 22.1K
R16 100
10 R62
C19 0.1uF

2.21K R64
0.1uF C3
3.32K R58
61.9K R23
1M R38
0.01UF C29
66.5K R24
47.5K R67
2k R33
C30 0.01UF
C7 0.1uF
100K R5
1000pF C8
4.02K R76
40.2K R74
R75 11K
C27 0.01UF
R69 210K
R37 1M
R73 43.2K
U7
LM339
C21 0.1uF

0 R82
BAT54 D8
1M R84
C36 1uF
100 R60
C4 0.1uF

R83 0

FL2

Assembly_Top

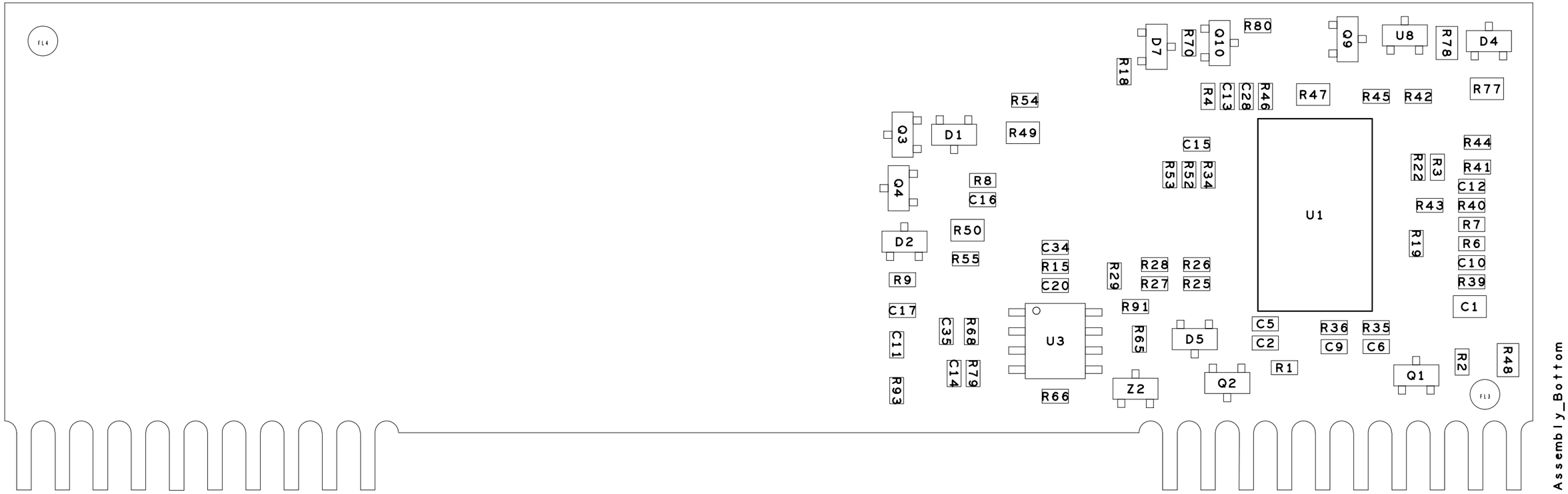
FL4
R80
Q9
U8
R78
D4
D7
R70
Q10
R18
R4
C13
C28
R46
R47
R45
R42
R77
R54
Q3
D1
R49
C15
R44
R22
R3
R41
R53
R52
R34
C12
Q4
R8
C16
U1
R43
R40
R50
R7
D2
R19
R6
C34
R55
R28
R26
C10
R15
R29
R27
R25
R39
R9
C20
C1
R91
C17
C5
R36
R35
C35
R68
U3
R65
D5
C2
C9
C6
C11
R2
R48
C14
R79
Z2
Q2
R1
Q1
R93
R66
FL3
Assembly_Bottom

FL4

R54 4.75K
MMBD4448
D1
R49 249
Q3 2N7002E
Q4 2N7002E
10K R8
C16 100pF
R50 249
0.1uF C34
D2 MMBD4448
10K R9
R55 4.75K
10K R15
0.1uF C20
100pF C17
1000pF C11
R93 2k
C35 1000pF
R68 100K
C14 0.1uF
R79 11K
U3 LM393
R66 40.2K
R91 43.2K
R65 4.02k
Z2 5.1V
D7 100ma
R18 10K
R70 100K
Q10 2N7002E
1K R80
R4
C13 0.047uF
C28 0.01UF
R46
0.047uF C15
R53 16.2k
R52 NU
R34 162k
10K R28
R26 NU
2k R29
R27 10K
R25 NU
NU D5
NU Q2
1uF C5
C2 0.1uF
R11
U1 ICE2HS01G
Q9 2N7002E
R47 0
3.32K R45
R42 5.62K
U8 RED
R78 6.81K
D4 GREEN
R77 6.81K
NU R3
R22 82.5K
R44 1.3K
R41 5.62K
C12 .015UF
R43 5.11K
R40 7.87K
R7 1K
R19 1.1K
R6 432K
C10 1000pF
R39 2M
C1 4.7uF
1M R36
R35 1M
C9 1000pF
C6 1uF
Q1 NU
R2 NU
R48 0
FL3

Assembly_Bottom