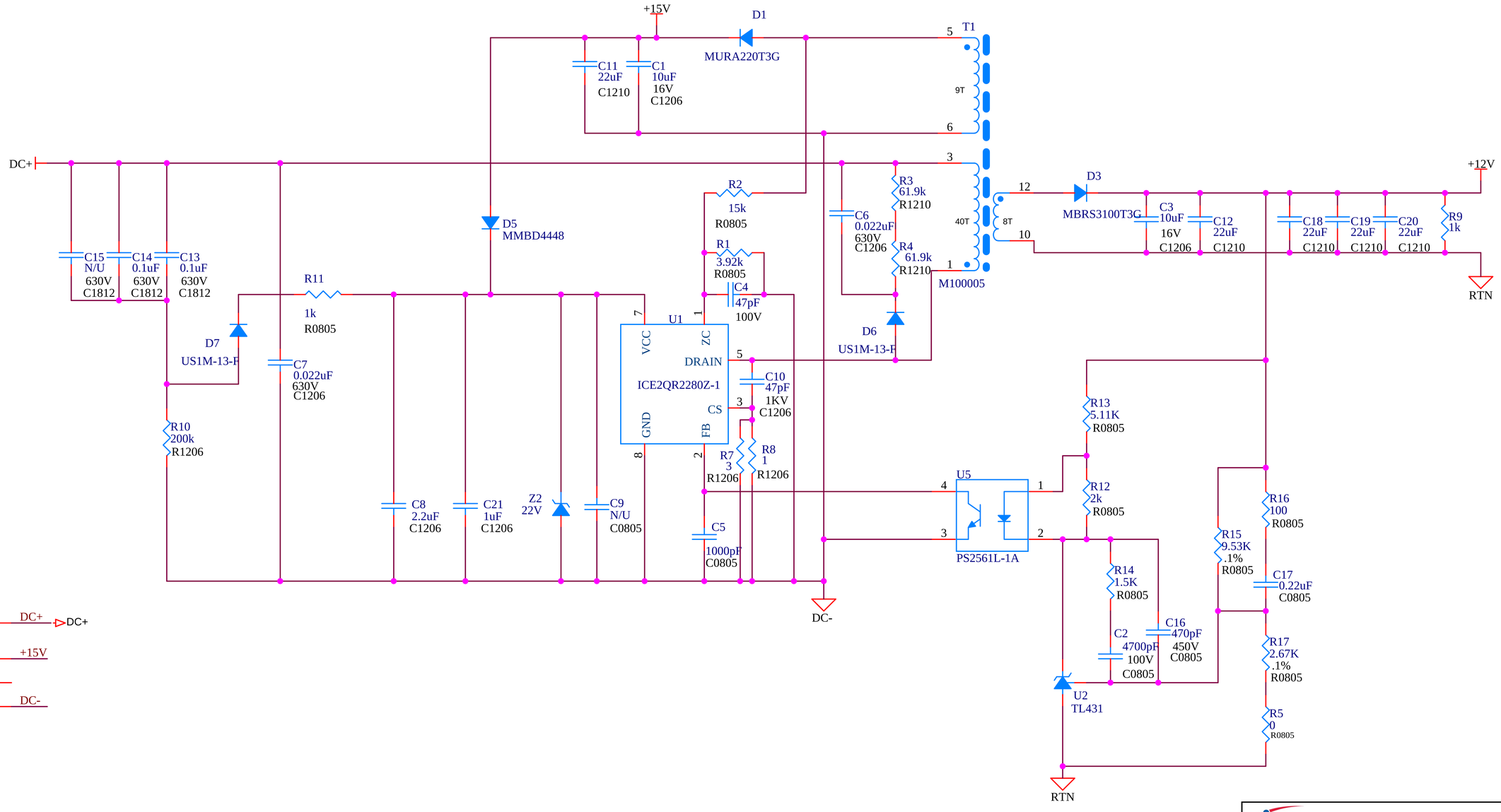
+15V
D1
MURA220T3G
T1
5
9T
6
C11
22uF
C1210
C1
10uF
16V
C1206
DC+
3
R2
15k
R0805
R3
61.9k
R1210
C6
0.022uF
630V
C1206
R4
61.9k
R1210
40T
8T
12
10
1
M100005
D3
MBRS3100T3G
+12V
C3
10uF
16V
C1206
C12
22uF
C1210
C18
22uF
C1210
C19
22uF
C1210
C20
22uF
C1210
R9
1k
RTN
D5
MMBD4448
C15
N/U
630V
C1812
C14
0.1uF
630V
C1812
C13
0.1uF
630V
C1812
R1
3.92k
R0805
C4
47pF
100V
R11
1k
R0805
U1
VCC
ZC
DRAIN
ICE2QR2280Z-1
GND
FB
CS
7
1
5
3
8
2
D6
US1M-13-F
D7
US1M-13-F
C7
0.022uF
630V
C1206
C10
47pF
1KV
C1206
R10
200k
R1206
R7
3
R1206
R8
1
R1206
C8
2.2uF
C1206
C21
1uF
C1206
Z2
22V
C9
N/U
C0805
C5
1000pF
C0805
DC-
U5
4
1
3
2
PS2561L-1A
R13
5.11K
R0805
R12
2k
R0805
R14
1.5K
R0805
C2
4700pF
100V
C0805
C16
470pF
450V
C0805
U2
TL431
R15
9.53K
.1%
R0805
R16
100
R0805
C17
0.22uF
C0805
R17
2.67K
.1%
R0805
R5
0
R0805
RTN
P3
1 DC+
2 +15V
3
4 DC-
5 +12V
6 RTN
DC+
Bias Bd
FL1 FL2 FL3 FL4
PC Board (FAB)
P100045 B
Infineon Technologies Americas Corp.
101 N. Sepulveda Blvd. El Segundo, California 90245
Title
LLC3KW_BIAS_SC
BIAS_PWR SC
Bias_PWR
Size
Document Number
Rev
B
Date: Friday, January 05, 2018
Sheet 1 of 1