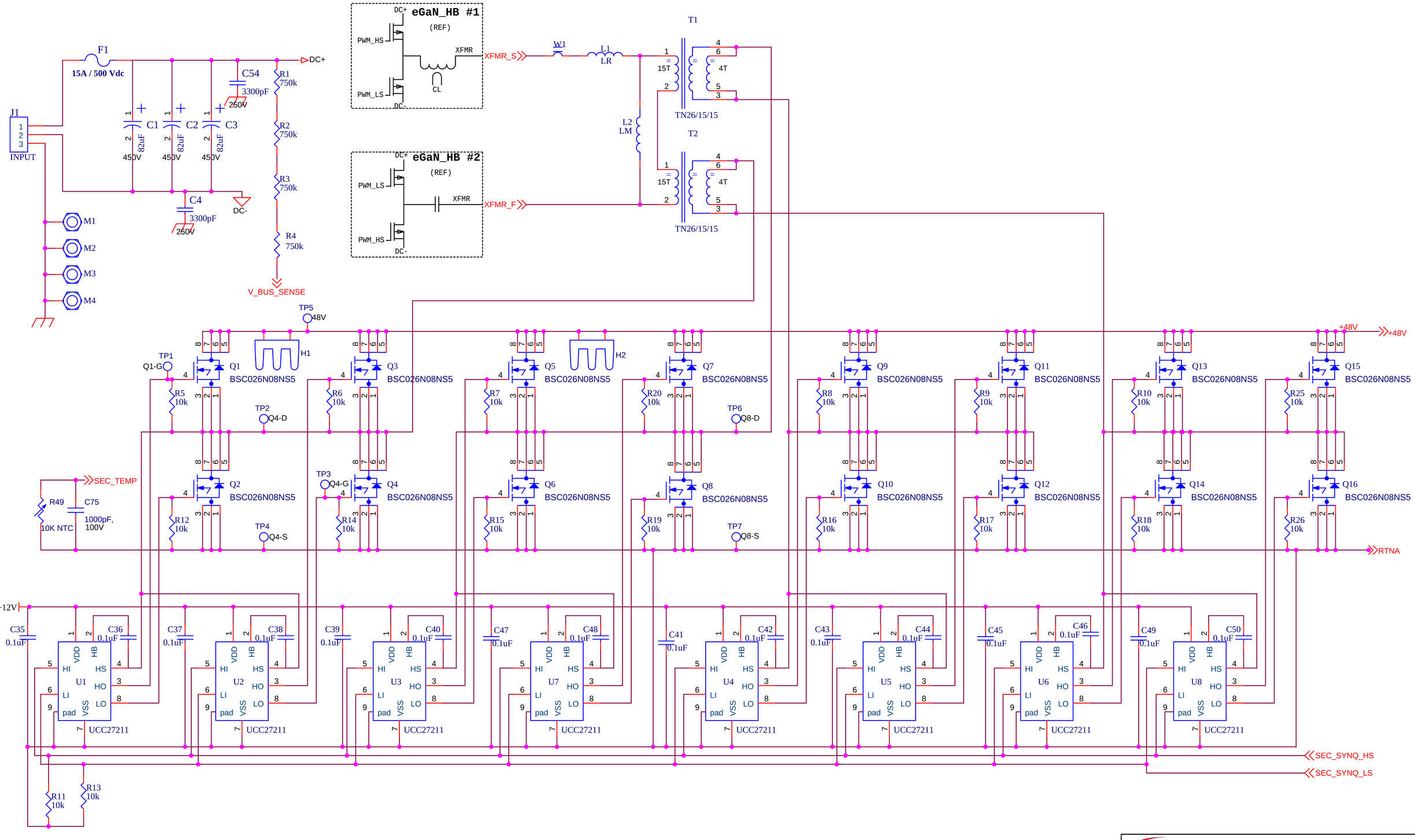

PC Board (FAB)
P100040 F

Infineon Technologies Americas Corp.
101 N. Pacific Coast Highway El Segundo, California 90245

Title	3600W-EGAN_MB_2-HS	Main Board with Heatsinks Input - Transformer -Sec FETs
Size	Document Number **P100040**	Rev **F**
Date: Thursday, October 31, 2019	Sheet 1 of 2	

OUTPUT FILTER

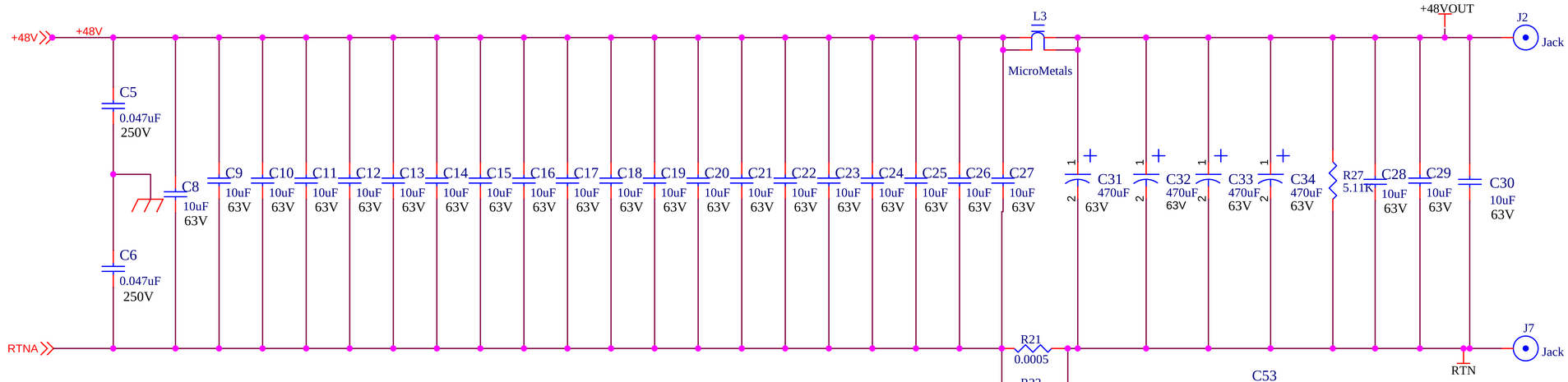

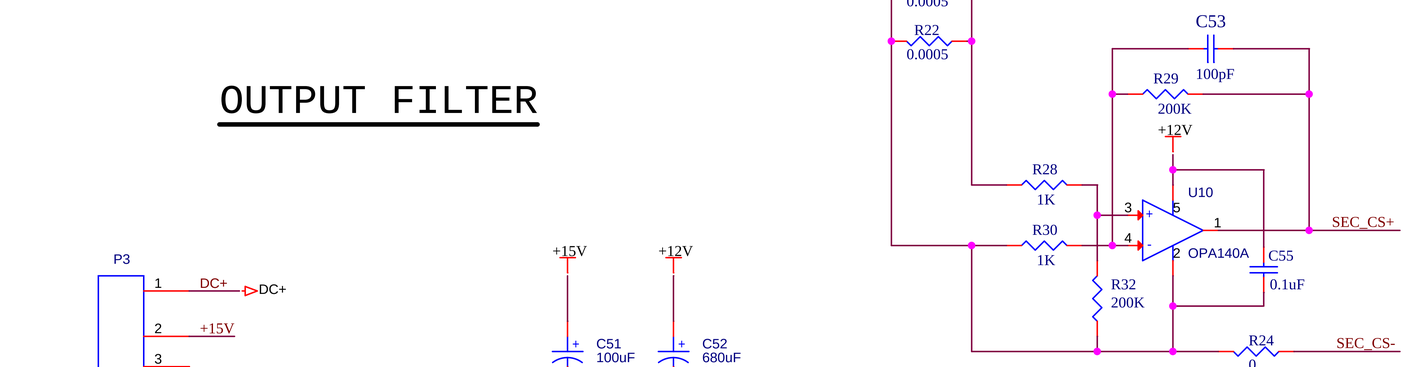

OUTPUT CURRENT LIMIT

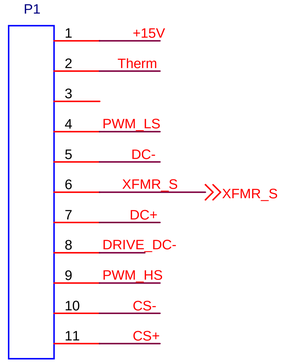

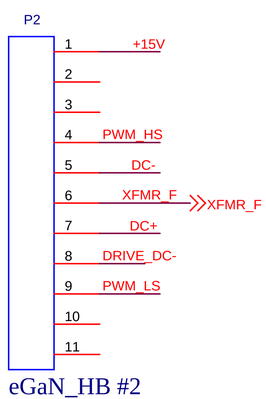

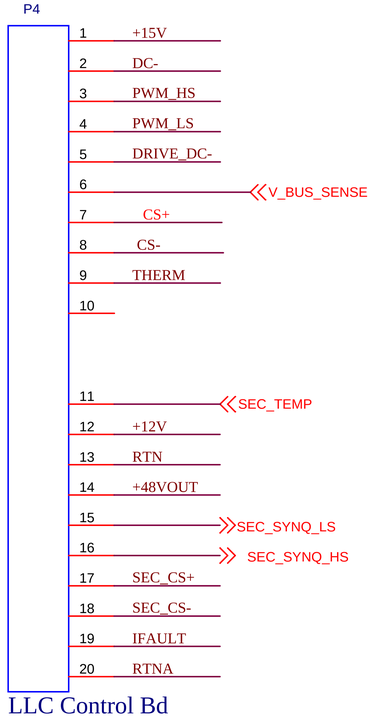

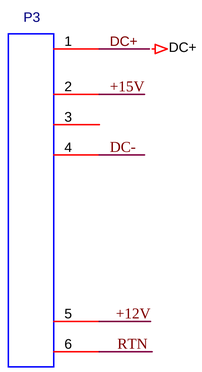

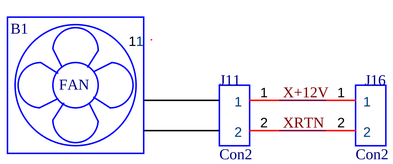

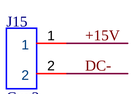

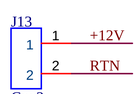

Infineon Technologies Americas Corp. 101 N. Pacific Coast Highway El Segundo, California 90245			
Title: 3600W-EGAN_MB_2-HS		Main Board with Heatsinks Output & Control Boards	
Size	Document Number: P100040		Rev: F
Date: Thursday, October 31, 2019		Sheet 2 of 2	