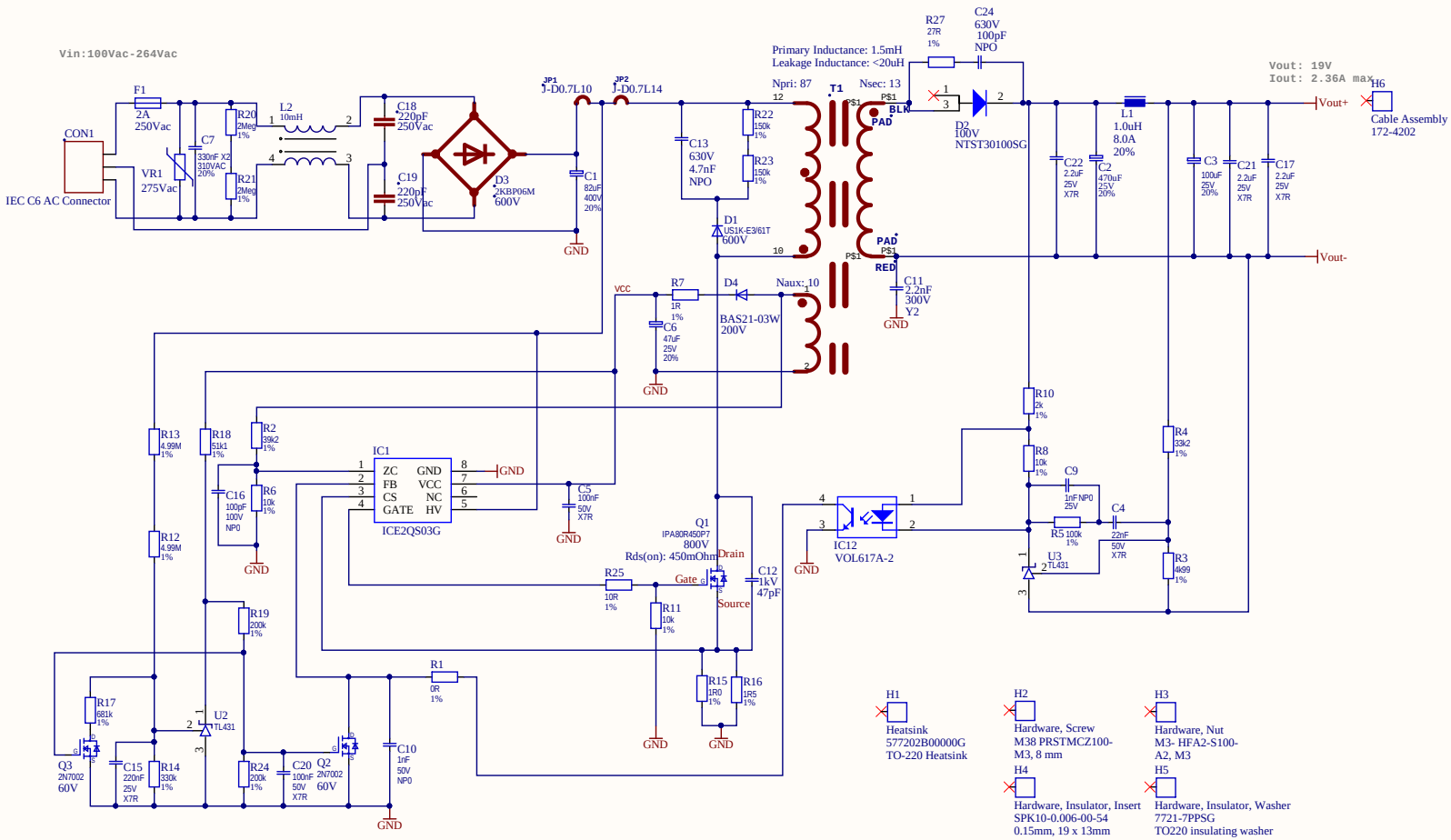

PROJECT NAME: 35W_800V_P7_TO220_DPack.PrjPcb C:\Altium_checkout\35W_800V_P7_TO220_DPack\35W_800V_P7_TO220_DPack.SchDoc					Infineon Technologies AG Siemensstraße 2 9500 Villach Austria
SHEET NAME: 35W_800V_P7_TO220_DPack.SchDoc svn revision 675					
DRAWN BY: Jared Huntington	DEPARTMENT: IFAT PMM AC/DC AE	DATE: 17.06.2016	TIME: 14:11:17	SIZE: A3	sheet of