6W_bias_ICE5Q_V2_1.SchDoc

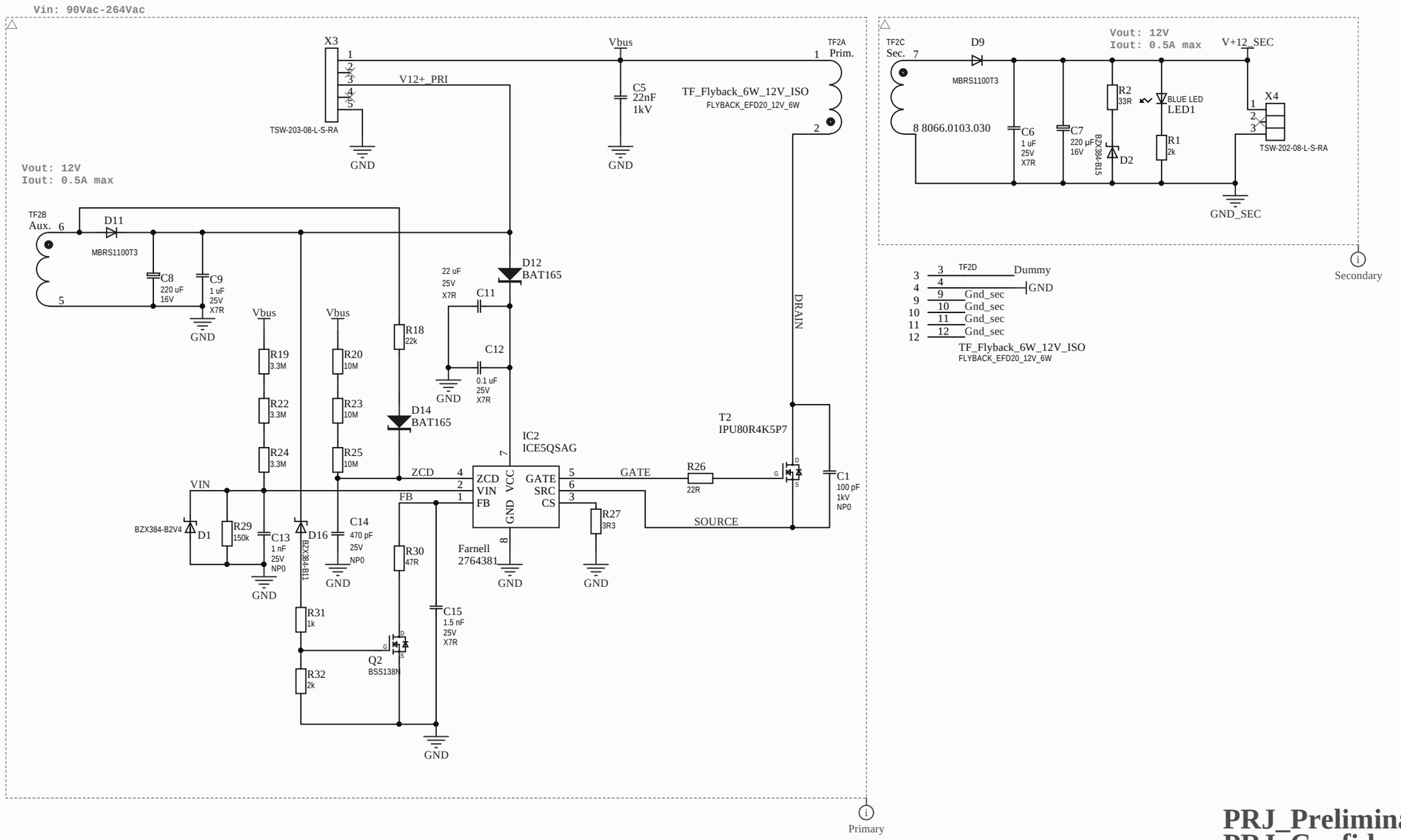

PRJ_Preliminary
PRJ_ConfidentialStatus

PRJ_Organization **PRJ_Address1** PRJ_Address2			
Title	PRJ_Title		
Variant	[No Variations]	Approved	<Appr.>
Size: A3	Document Name: 6W_bias_ICE5Q_V2_1.SchDoc	Rel.	Rev. PRJ_Engineer
Author: PRJ_SCH_Author			
Date: 26.07.2017 Time: 17:06:37	SVN Revision: 919 [Locally Modified]		
PRJ_Copyright		Sheet	of