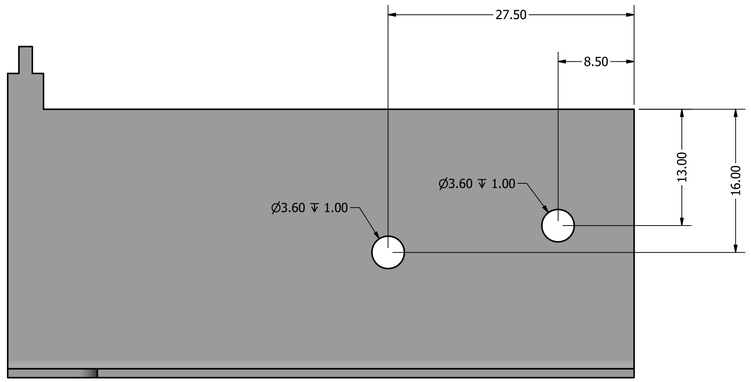



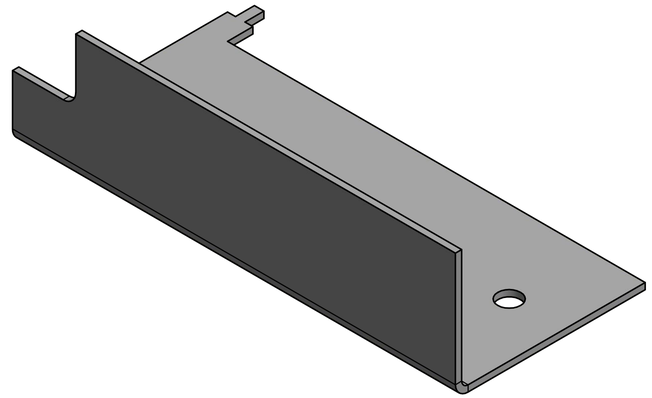

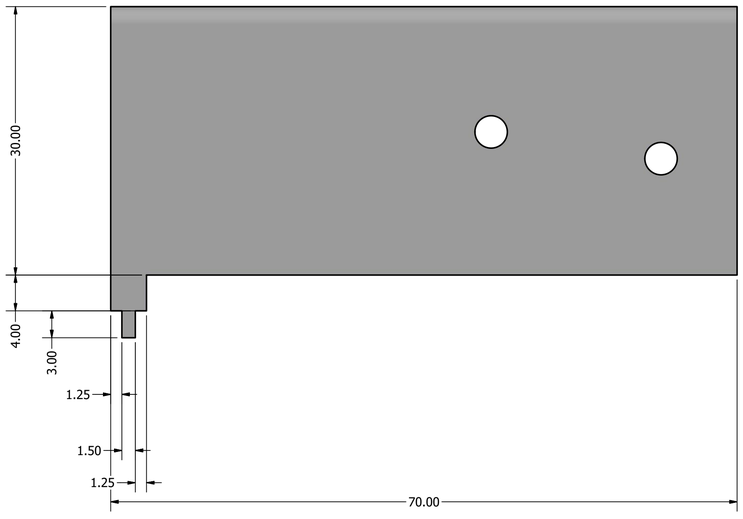

PARTS LIST			
ITEM	QTY	PART NUMBER	DESCRIPTION
1	1	HT200002001	copper material with tinned surface

DRAWN zechnerf	27.06.2019		
CHECKED		TITLE	
QA			
MFG			
APPROVED		SIZE D	DWG NO HT200002001 REV
		SCALE 3 : 1	SHEET 1 OF 1