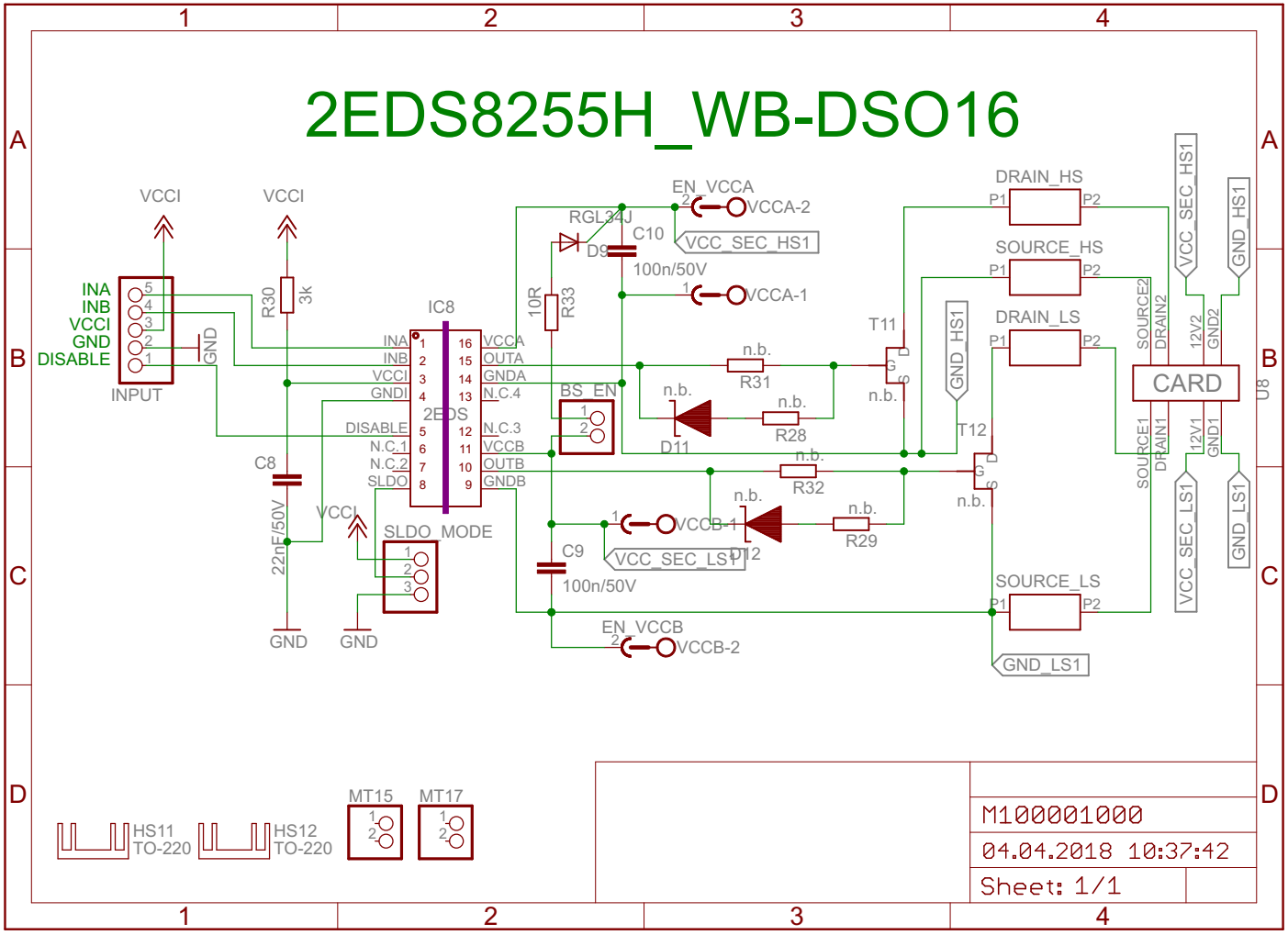

04.04.2018 17:23:28 C:\Users\MuMar\Desktop\Infineon Driver Demoboards\P100001000_KIT_DRIVER_2EDS8255H\M100001000.sch (Sheet: 1/1)