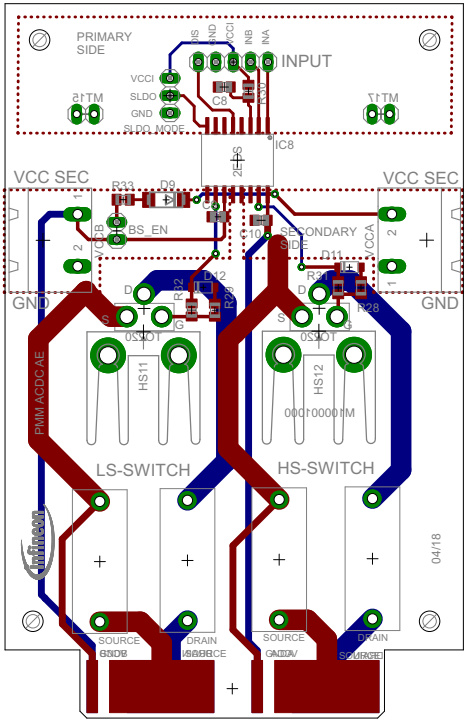
PRIMARY SIDE
INPUT
VCC SEC
VCC SEC
SECONDARY SIDE
GND
GND
LS-SWITCH
HS-SWITCH
SOURCE
DRAIN
SOURCE
DRAIN
04/18