IFX_IPC_A4_Disclaimer.SchDoc

Important notice

“Evaluation Boards and Reference Boards” shall mean products embedded on a printed circuit board (PCB) for demonstration and/or evaluation purposes, which include, without limitation, demonstration, reference and evaluation boards, kits and design (collectively referred to as “Reference Board”).

Environmental conditions have been considered in the design of the Evaluation Boards and Reference Boards provided by Infineon Technologies. The design of the Evaluation Boards and Reference Boards has been tested by Infineon Technologies only as described in this document. The design is not qualified in terms of safety requirements, manufacturing and operation over the entire operating temperature range or lifetime.

The Evaluation Boards and Reference Boards provided by Infineon Technologies are subject to functional testing only under typical load conditions. Evaluation Boards and Reference Boards are not subject to the same procedures as regular products regarding returned material analysis (RMA), process change notification (PCN) and product discontinuation (PD).

Evaluation Boards and Reference Boards are not commercialized products, and are solely intended for evaluation and testing purposes. In particular, they shall not be used for reliability testing or production. The Evaluation Boards and Reference Boards may therefore not comply with CE or similar standards (including but not limited to the EMC Directive 2004/EC/108 and the EMC Act) and may not fulfill other requirements of the country in which they are operated by the customer. The customer shall ensure that all Evaluation Boards and Reference Boards will be handled in a way which is compliant with the relevant requirements and standards of the country in which they are operated.

The Evaluation Boards and Reference Boards as well as the information provided in this document are addressed only to qualified and skilled technical staff, for laboratory usage, and shall be used and managed according to the terms and conditions set forth in this document and in other related documentation supplied with the respective Evaluation Board or Reference Board.

It is the responsibility of the customer’s technical departments to evaluate the suitability of the Evaluation Boards and Reference Boards for the intended application, and to evaluate the completeness and correctness of the information provided in this document with respect to such application.

The customer is obliged to ensure that the use of the Evaluation Boards and Reference Boards does not cause any harm to persons or third party property.
The Evaluation Boards and Reference Boards and any information in this document is provided "as is" and Infineon Technologies disclaims any warranties, express or implied, including but not limited to warranties of non-infringement of third party rights and implied warranties of fitness for any purpose, or for merchantability.

Infineon Technologies shall not be responsible for any damages resulting from the use of the Evaluation Boards and Reference Boards and/or from any information provided in this document. The customer is obliged to defend, indemnify and hold Infineon Technologies harmless from and against any claims or damages arising out of or resulting from any use thereof.

Infineon Technologies reserves the right to modify this document and/or any information provided herein at any time without further notice.

Infineon Technologies AG
IFAG DES TCP PCB
Am Campeon 1-15 - 85579 Neubiberg - Germany

Title	<Project Name>
Variant	REF-9KW2LBOOST 2CH
Size: A4	Document Name: IFX_IPC_A4_Disclaimer.SchDoc
Rev.	<Rev.>
Date: 7/14/2025	Time: 11:58:53 AM

© Infineon Technologies AG 2019. All Rights Reserved.

REF-9KW2LBOOST - APS and fan control.SchDoc

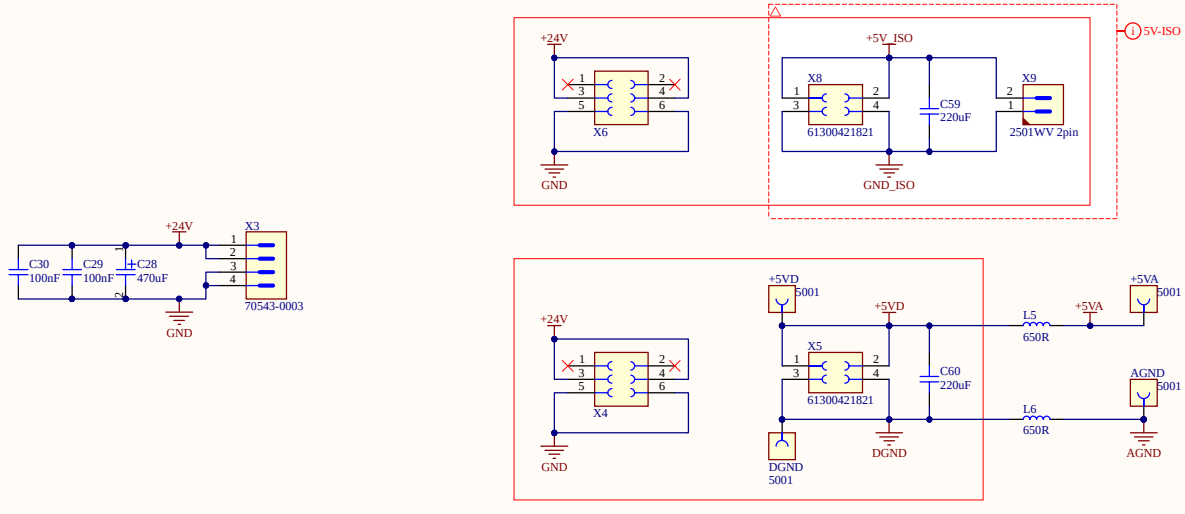

<DOC_Preliminary>
<restrict>

Infineon Technologies AG **IFAG DES TCP PCB** Am Campeon 1-15 - 85579 Neubiberg - Germany			
Title	<Project Name>		
Variant	REF-9KW2LBOOST 2CH	Approved	<Appr.>
Size: A3	Document Name: REF-9KW2LBOOST - APS and fan control.SchDoc	Rel.: <Rel.>	Rev.: <Rev.>
Author: <Author>			
Date: 7/14/2025 Time: 11:58:53 AM	SVN Revision: Not in version control		
© Infineon Technologies AG 2019. All Rights Reserved.	Sheet of		

REF-9KW2LBOOST - controller interface.SchDoc

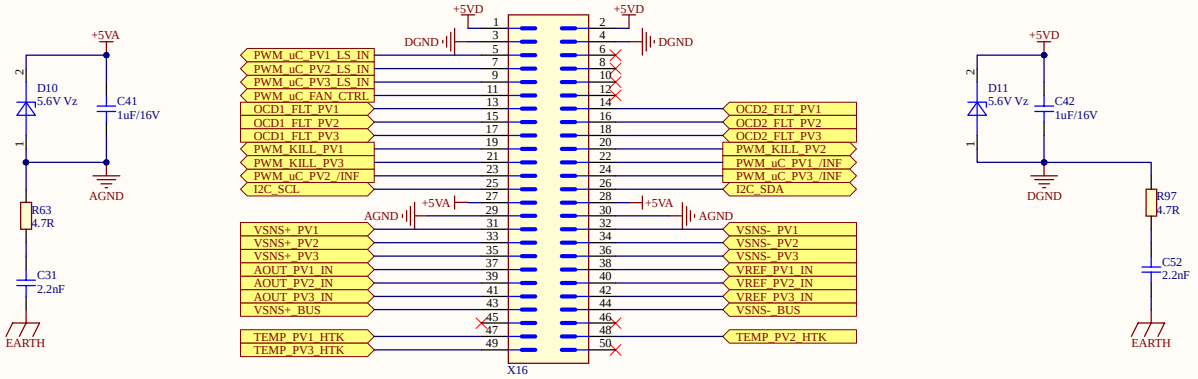

<DOC_Preliminary>
<restrict>

Infineon Technologies AG
IFAG DES TCP PCB
Am Campeon 1-15 - 85579 Neubiberg - Germany

Title	<Project Name>		
Variant	REF-9KW2LBOOST 2CH	Approved	<Appr.>
Size: A3	Document Name: REF-9KW2LBOOST - controller interface.SchDoc	Rel. <Rel.>	Rev. <Rev.>

Author: <Author>
Date: 7/14/2025 Time: 11:58:53 AM SVN Revision: Not in version control
© Infineon Technologies AG 2019. All Rights Reserved.
Sheet of

REF-9KW2LBOOST - current sensing.SchDoc

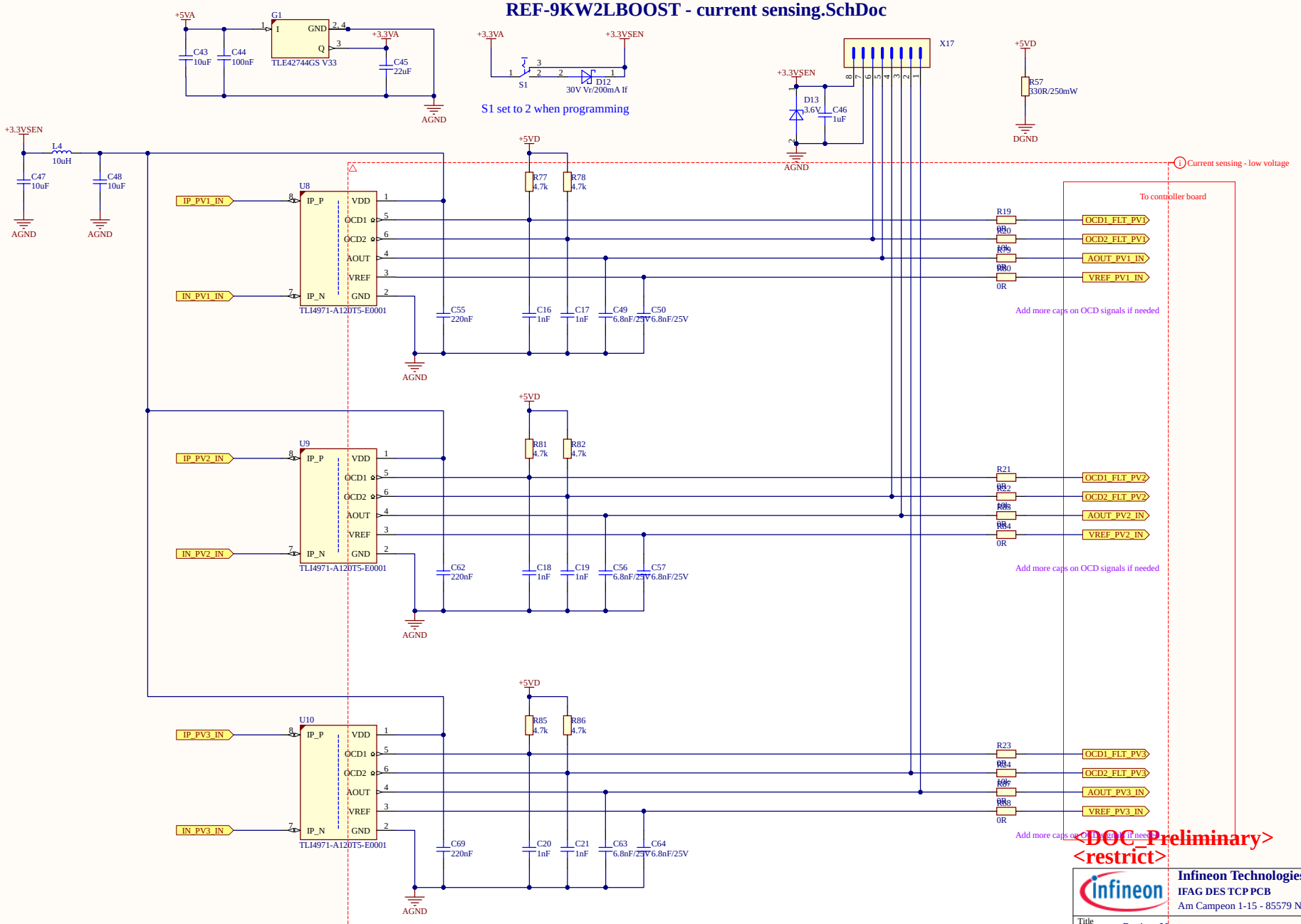

<DOC_Preliminary>
<restrict>

Infineon Technologies AG
IFAG DES TCP PCB
Am Campeon 1-15 - 85579 Neubiberg - Germany

Title	<Project Name>		
Variant	REF-9KW2LBOOST 2CH	Approved	<Appr.>
Size: A3	Document Name: REF-9KW2LBOOST - current sensing.SchDoc	Rel. <Rel.>	Rev. <Rev.>
Author: <Author>			
Date: 7/14/2025	Time: 11:58:53 AM	SVN Revision: Not in version control	

© Infineon Technologies AG 2019. All Rights Reserved.

Sheet of

REF-9KW2LBOOST - fault and latch.SchDoc

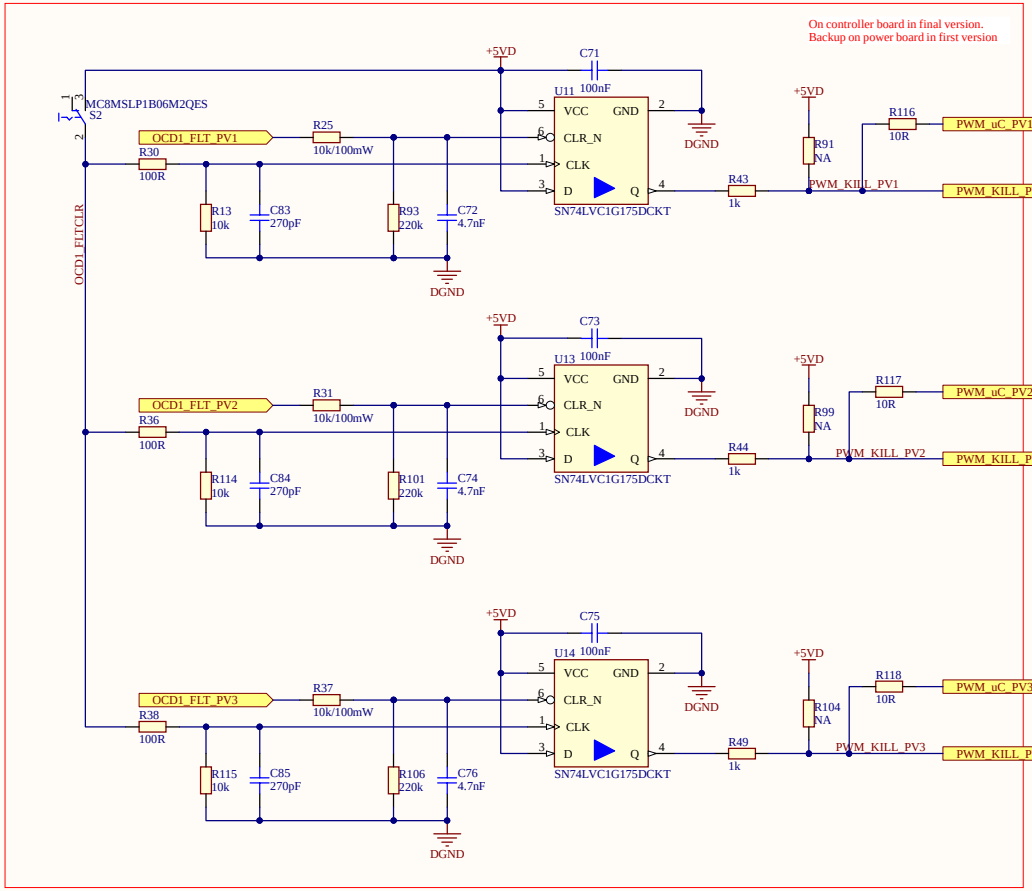

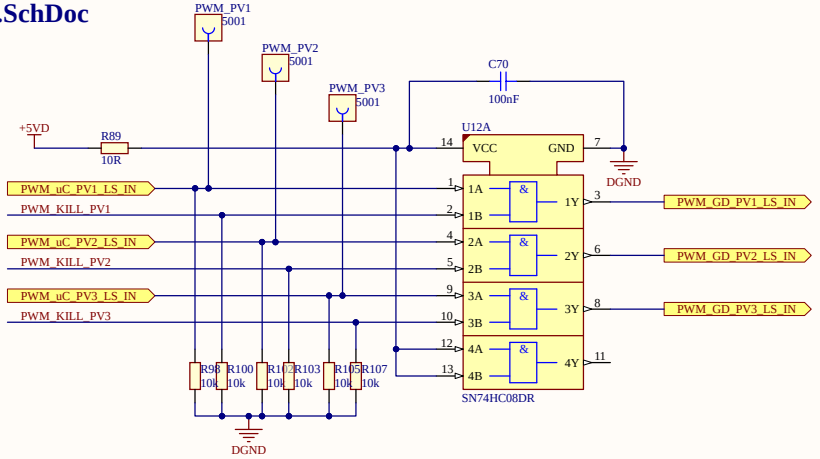

INPUTS		OUTPUT
A	B	Y
H	H	H
L	X	L
X	L	L

The SN74LVC1G175 device has an asynchronous clear ($\overline{CLR}$) input. When $\overline{CLR}$ is high, data from the input pin (D) is transferred to the output pin (Q) on the clock's (CLK) rising edge. When $\overline{CLR}$ is low, Q is forced into the low state, regardless of the clock edge or data on D.

Table 1. Function Table

INPUTS			OUTPUT
$\overline{CLR}$	CLK	D	Q
H	↑	L	L
H	↑	H	H
H	H or L	X	Q_0
L	X	X	L

PIN		I/O	
NAME	NO.		
CLK	1	I	Clock Input
$\overline{CLR}$	6	I	Clear Data Input
D	3	I	Data Input
GND	2	—	Ground
Q	4	O	Output
V_{CC}	5	—	Power

<DOC_Preliminary>
<restrict>

Infineon Technologies AG
IFAG DES TCP PCB
Am Campeon 1-15 - 85579 Neubiberg - Germany

Title	<Project Name>		
Variant	REF-9KW2LBOOST 2CH	Approved	<Appr.>
Size: A3	Document Name: REF-9KW2LBOOST - fault and latch.SchDoc	Rel. <Rel.>	Rev. <Rev.>
Author: <Author>			
Date: 7/14/2025 Time: 11:58:54 AM	SVN Revision: Not in version control		

© Infineon Technologies AG 2019. All Rights Reserved.

Sheet of

REF-9KW2LBOOST - gate drive.SchDoc

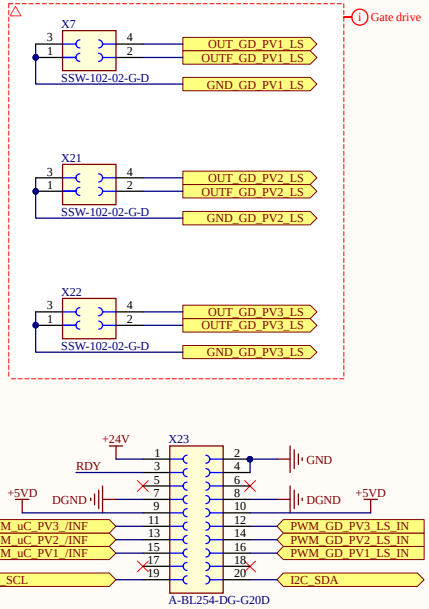

<DOC_Preliminary>
<restrict>

Infineon Technologies AG
IFAG DES TCP PCB
Am Campeon 1-15 - 85579 Neubiberg - Germany

Title	<Project Name>		
Variant	REF-9KW2LBOOST 2CH	Approved	<Appr.>
Size: A3	Document Name: REF-9KW2LBOOST - gate drive.SchDoc	Rel. <Rel.>	Rev. <Rev.>
Author: <Author>			
Date: 7/14/2025 Time: 11:58:54 AM	SVN Revision: Not in version control		

© Infineon Technologies AG 2019. All Rights Reserved.

Sheet of

REF-9KW2LBOOST - mechanics.SchDoc

MP1

97790603111

MP2

Value

MP3

97790603111

MP4

Value

MP5

97790603111

MP6

Value

MP7

97790603111

MP8

Value

MP9

97790603111

MP10

Value

MP11

97790603111

MP12

Value

MP13

97790603111

MP14

Value

MP15

97790603111

MP16

Value

MP17

97790603111

MP18

Value

MP19

97790603111

MP20

Value

MP41
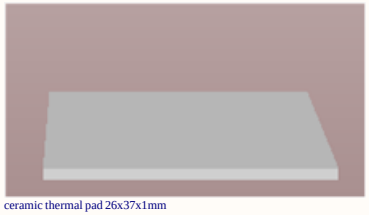
ceramic thermal pad 26x37x1mm

MP42
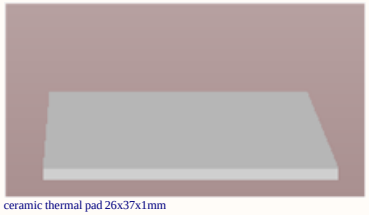
ceramic thermal pad 26x37x1mm

MP31

TY-LVH-1.5-22-34-4

MP32

TY-LVH-1.5-22-34-4

MP33

TY-LVH-1.5-22-34-4

MP34

TY-LVH-1.5-22-34-4

MP35

TY-LVH-1.5-22-34-4

MP36

TY-LVH-1.5-22-34-4

MP43
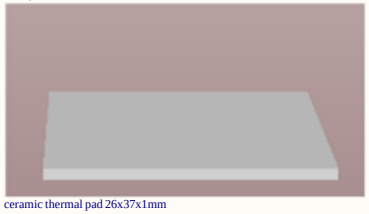
ceramic thermal pad 26x37x1mm

MP44
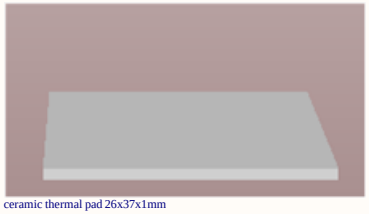
ceramic thermal pad 26x37x1mm

MP45
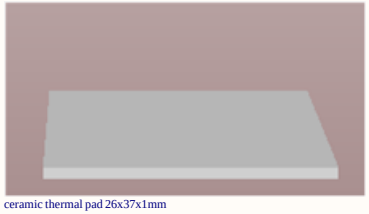
ceramic thermal pad 26x37x1mm

MP46
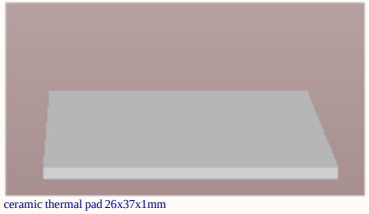
ceramic thermal pad 26x37x1mm

<DOC_Preliminary>
<restrict>

Infineon Technologies AG
IFAG DES TCP PCB
Am Campeon 1-15 - 85579 Neubiberg - Germany

Title	<Project Name>		
Variant	REF-9KW2LBOOST 2CH	Approved	<Appr.>
Size: A3	Document Name: REF-9KW2LBOOST - mechanics.SchDoc	Rel. <Rel.>	Rev. <Rev.>

Author: <Author>
Date: 7/14/2025 Time: 11:58:54 AM SVN Revision: Not in version control

© Infineon Technologies AG 2019. All Rights Reserved.

Sheet of

REF-9KW2LBOOST - power converter.SchDoc

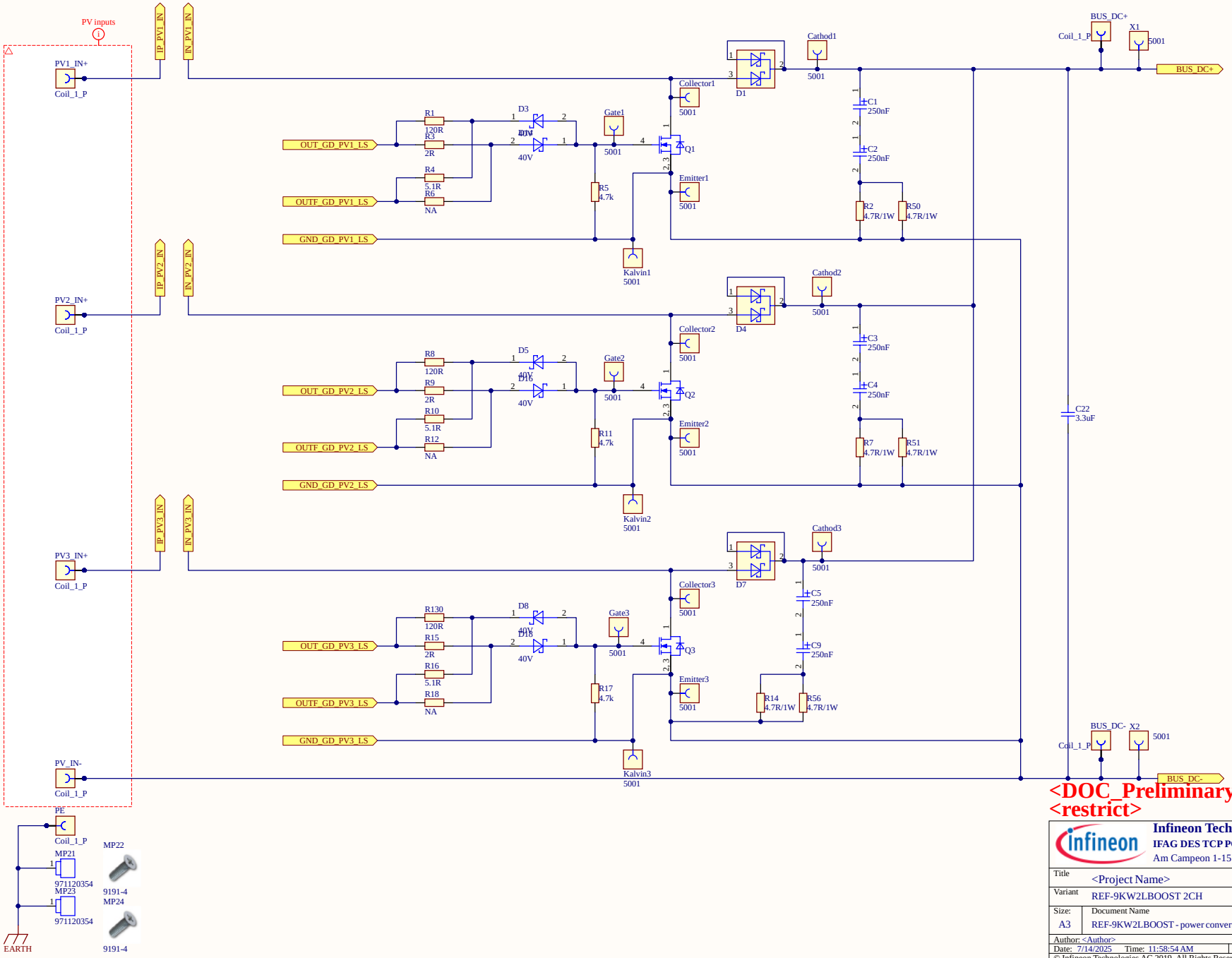

<DOC_Preliminary>
<restrict>

Infineon Technologies AG
IFAG DES TCP PCB
Am Campeon 1-15 - 85579 Neubiberg - Germany

Title	<Project Name>		
Variant	REF-9KW2LBOOST 2CH	Approved	<Appr.>
Size: A3	Document Name: REF-9KW2LBOOST - power converter.SchDoc	Rel. <Rel.>	Rev. <Rev.>
Author: <Author>			
Date: 7/14/2025 Time: 11:58:54 AM	SVN Revision: Not in version control		

© Infineon Technologies AG 2019. All Rights Reserved.

Sheet of

REF-9KW2LBOOST - temperature sensing.SchDoc

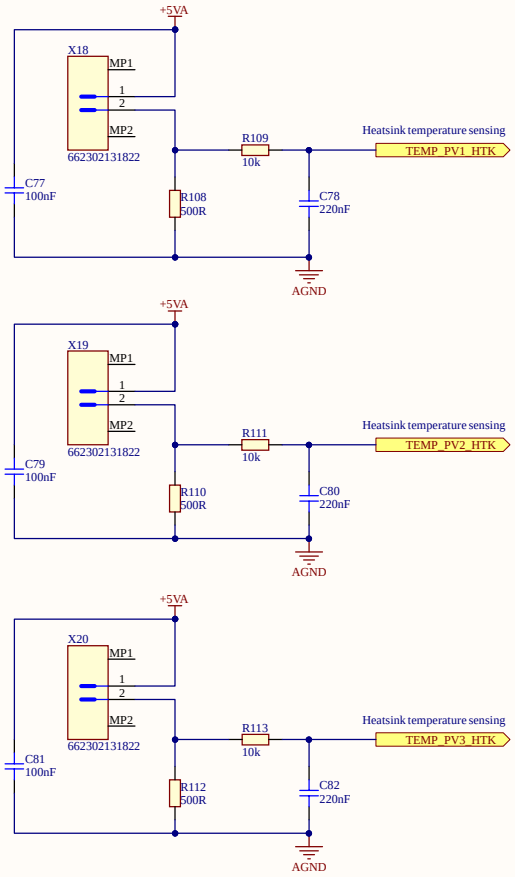

NTC thermistors for temperature measurement	B57703M0502A006
NTC Probes	M703/5k/A6

Application

Surface temperature measurement

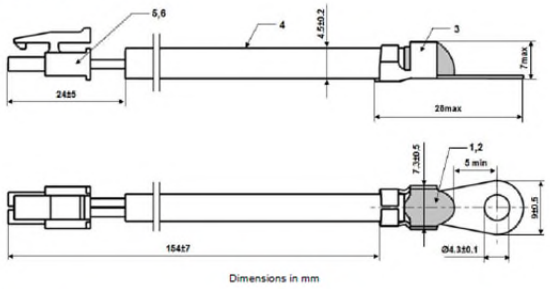

Dimensions in mm

Materials

No	Item	Material	Property	Remarks
1	Thermistor	Ceramic	EPCOS NTC	
2	Casting	Epoxy Resin		Black
3	Ring tongue	CuZn, tinned	AMP 280261-2 or equivalent	
4	Wire	Cu strand, PVC insulated	AWG 22	White jacket
5	Crimp contact	Phosphor bronze	AMP 1-794606-2	
6	Connector housing	Nylon	AMP 1445022-2	

<DOC_Preliminary>
<restrict>

Infineon Technologies AG
IFAG DES TCP PCB
Am Campeon 1-15 - 85579 Neubiberg - Germany

Title	<Project Name>		
Variant	REF-9KW2LBOOST 2CH	Approved	<Appr.>
Size: A3	Document Name: REF-9KW2LBOOST - temperature sensing.SchDoc	Rel. <Rel.>	Rev. <Rev.>
Author: <Author>			
Date: 7/14/2025 Time: 11:58:54 AM	SVN Revision: Not in version control		

© Infineon Technologies AG 2019. All Rights Reserved.

Sheet of

REF-9KW2LBOOST - voltage sensing.SchDoc

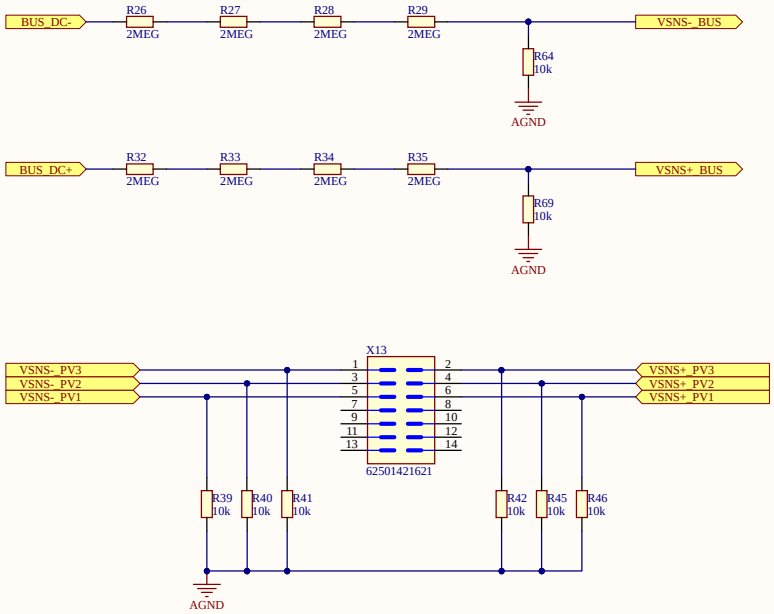

<DOC_Preliminary>
<restrict>

Infineon Technologies AG
IFAG DES TCP PCB
Am Campeon 1-15 - 85579 Neubiberg - Germany

Title	<Project Name>		
Variant	REF-9KW2LBOOST 2CH	Approved	<Appr.>
Size: A3	Document Name: REF-9KW2LBOOST - voltage sensing.SchDoc	Rel. <Rel.>	Rev. <Rev.>
Author: <Author>			
Date: 7/14/2025 Time: 11:58:54 AM	SVN Revision: Not in version control		

© Infineon Technologies AG 2019. All Rights Reserved.

Sheet of