02_Flyback_Rev03.SchDoc

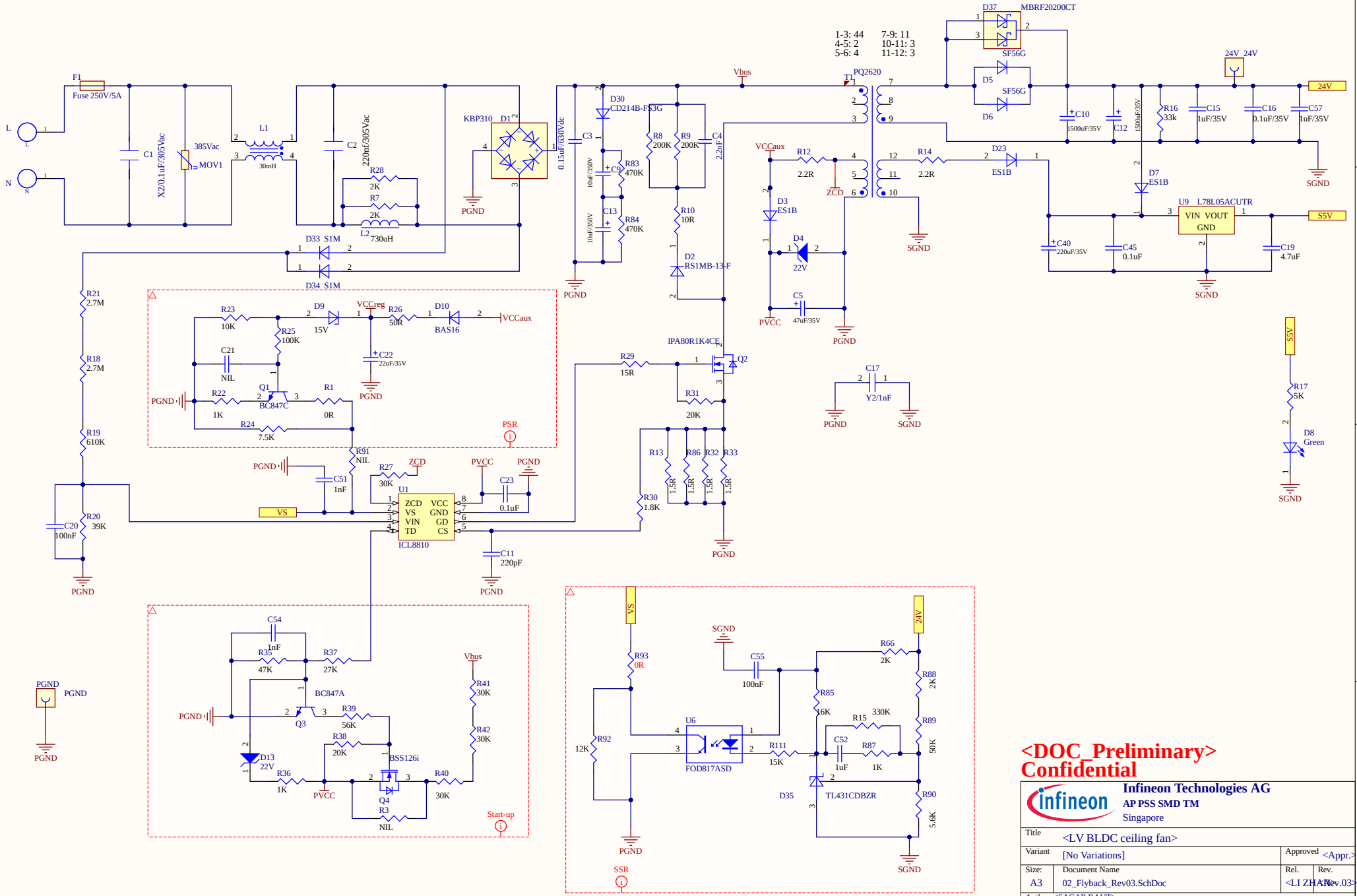

<DOC_Preliminary>
Confidential

Infineon Technologies AG AP PSS SMD TM Singapore			
Title	<LV BLDC ceiling fan>		
Variant	[No Variations]	Approved	<Appr.>
Size: A3	Document Name: 02_Flyback_Rev03.SchDoc	Rel.	Rev.: <LI ZHANG> <Rev.03>
Author: <SAGAR RAUT>			
Date: 18/9/2024 Time: 2:51:36 pm		SVN Revision: Not in version control	
© Infineon Technologies AG 2021. All Rights Reserved.		Sheet	of 3

03_3Ph_Inverter_stage_Rev03.SchDoc

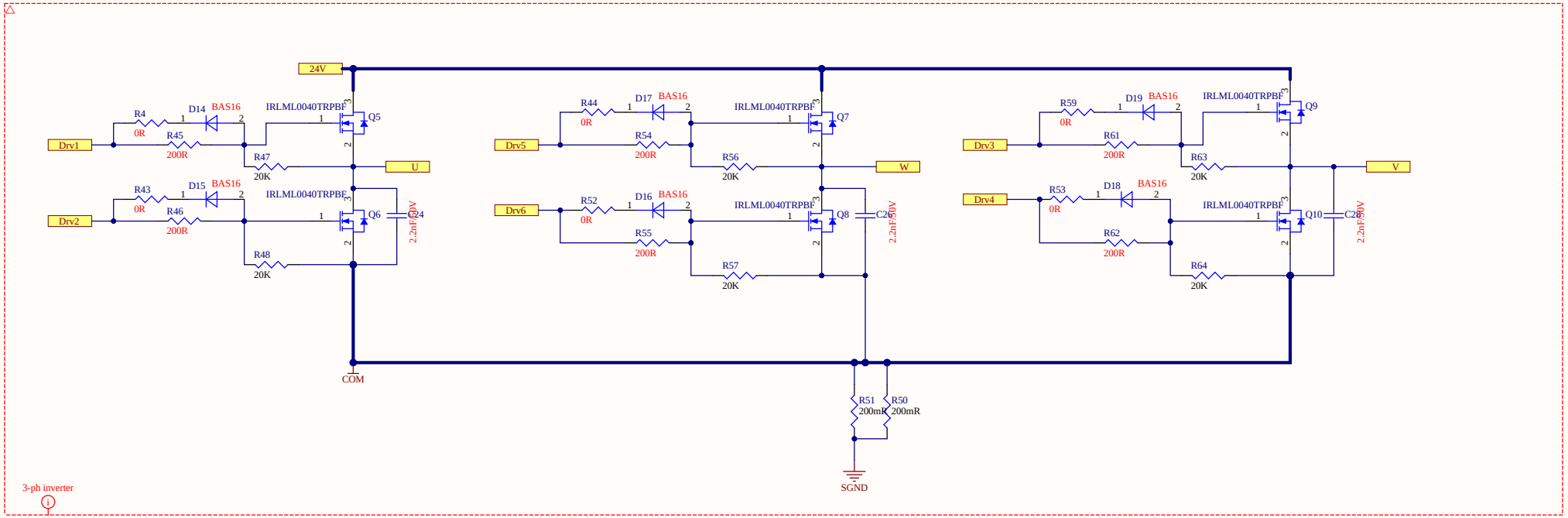

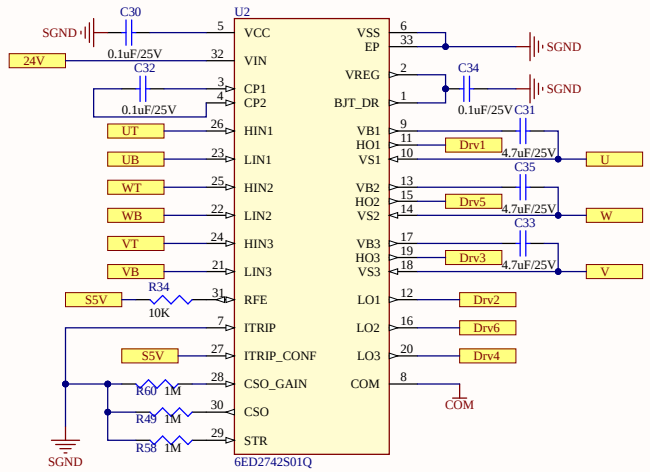

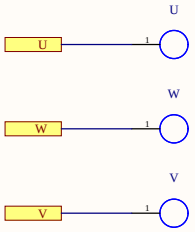

<DOC_Preliminary>
Confidential

Infineon Technologies AG AP PSS SMD TM Singapore			
Title	<LV BLDC ceiling fan>		
Variant	[No Variations]	Approved	<Appr.>
Size: A3	Document Name: 03_3Ph_Inverter_stage_Rev03.SchDoc	Rel. <LI ZHAN	Rev. <Rev.03>
Author: <SAGAR RAUT>			
Date: 18/9/2024 Time: 2:51:36 pm	SVN Revision: Not in version control		
© Infineon Technologies AG 2021. All Rights Reserved.	Sheet of 3		

04_MCU_Rev03.SchDoc

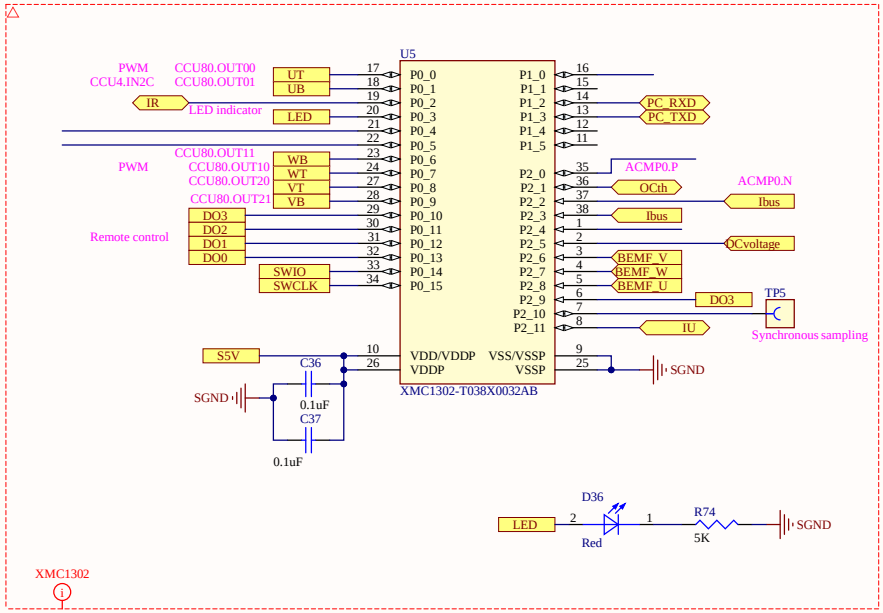

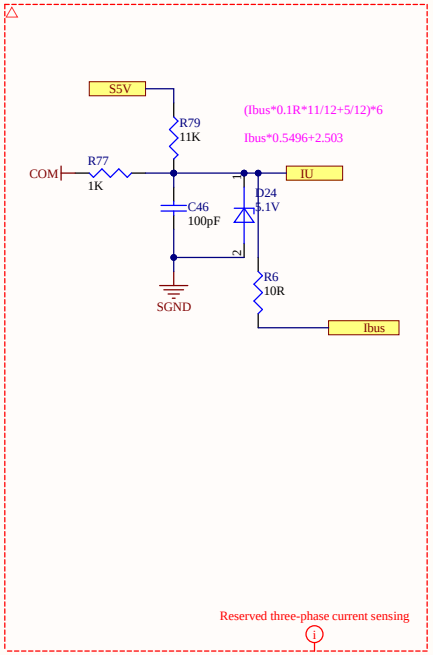

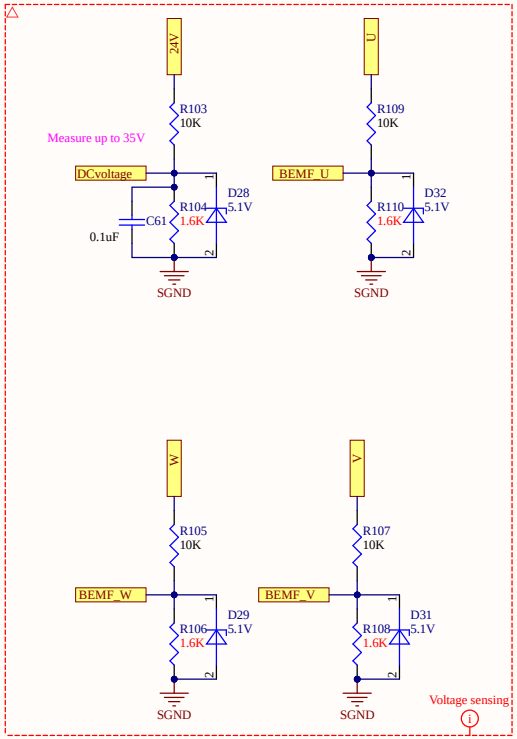

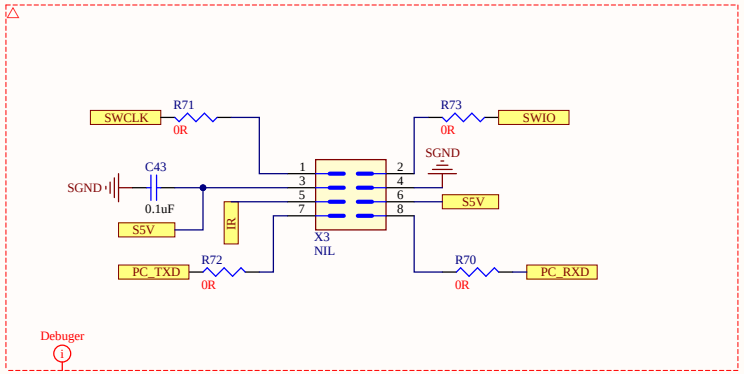

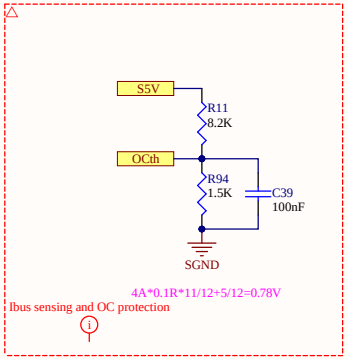

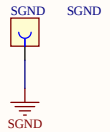

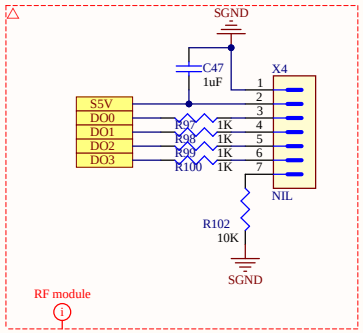

<DOC_Preliminary>
Confidential

Infineon Technologies AG AP PSS SMD TM Singapore			
Title	<LV BLDC ceiling fan>		
Variant	[No Variations]	Approved	<Appr.>
Size: A3	Document Name: 04_MCU_Rev03.SchDoc	Rel.	Rev. <LI ZHANG.03>
Author: <SAGAR RAUT>			
Date: 18/9/2024 Time: 2:51:37 pm	SVN Revision: Not in version control		
© Infineon Technologies AG 2021. All Rights Reserved.	Sheet of 3		