Infineon Technologies
Infineon Logo
EVAL_6EDL7141_FOC_3SH

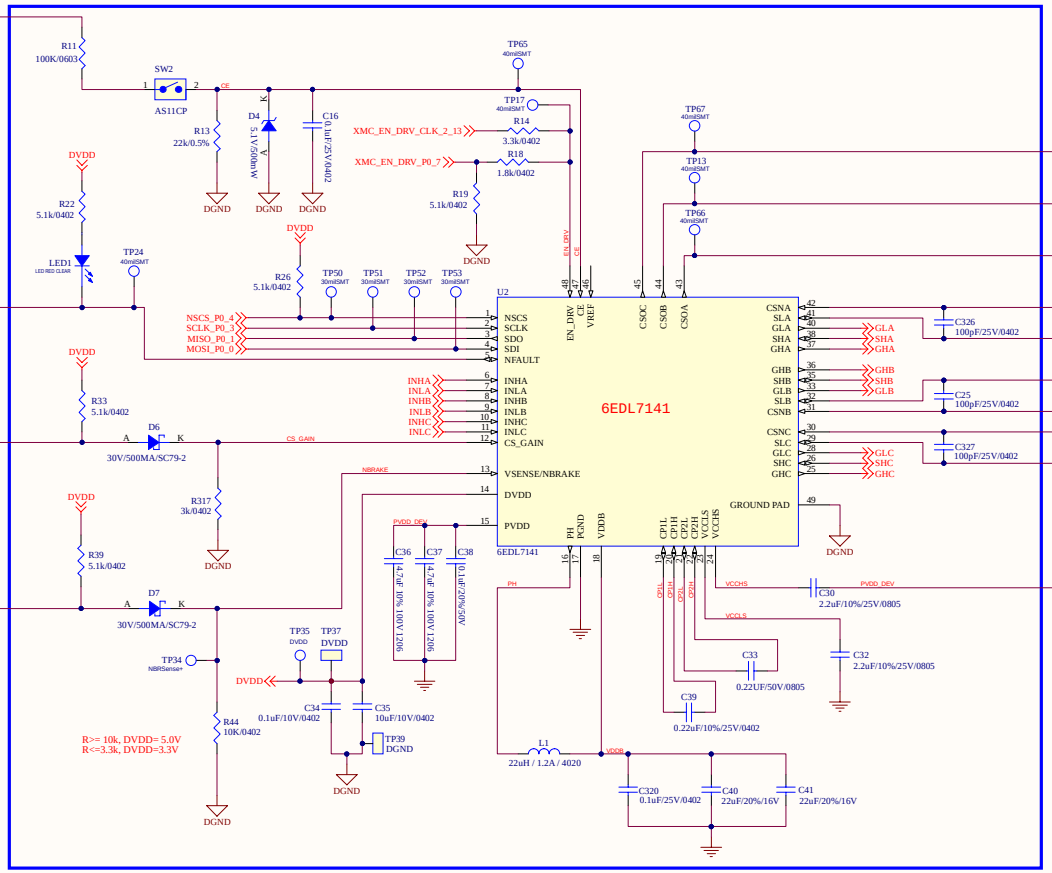

Infineon Technologies AG
101 N. Pacific Coast HWY, El Segundo, CA 90245

Title:	EVAL_6EDL7141_FOC_3SH
Revision:	V2.2
Document Name:	6EDL7141.SchDoc
Drawn By:	SV
Approved By:	BD
Current Date:	12/11/2022 Current Time: 2:07:55 PM
Size:	C Sheet: 1 of 4

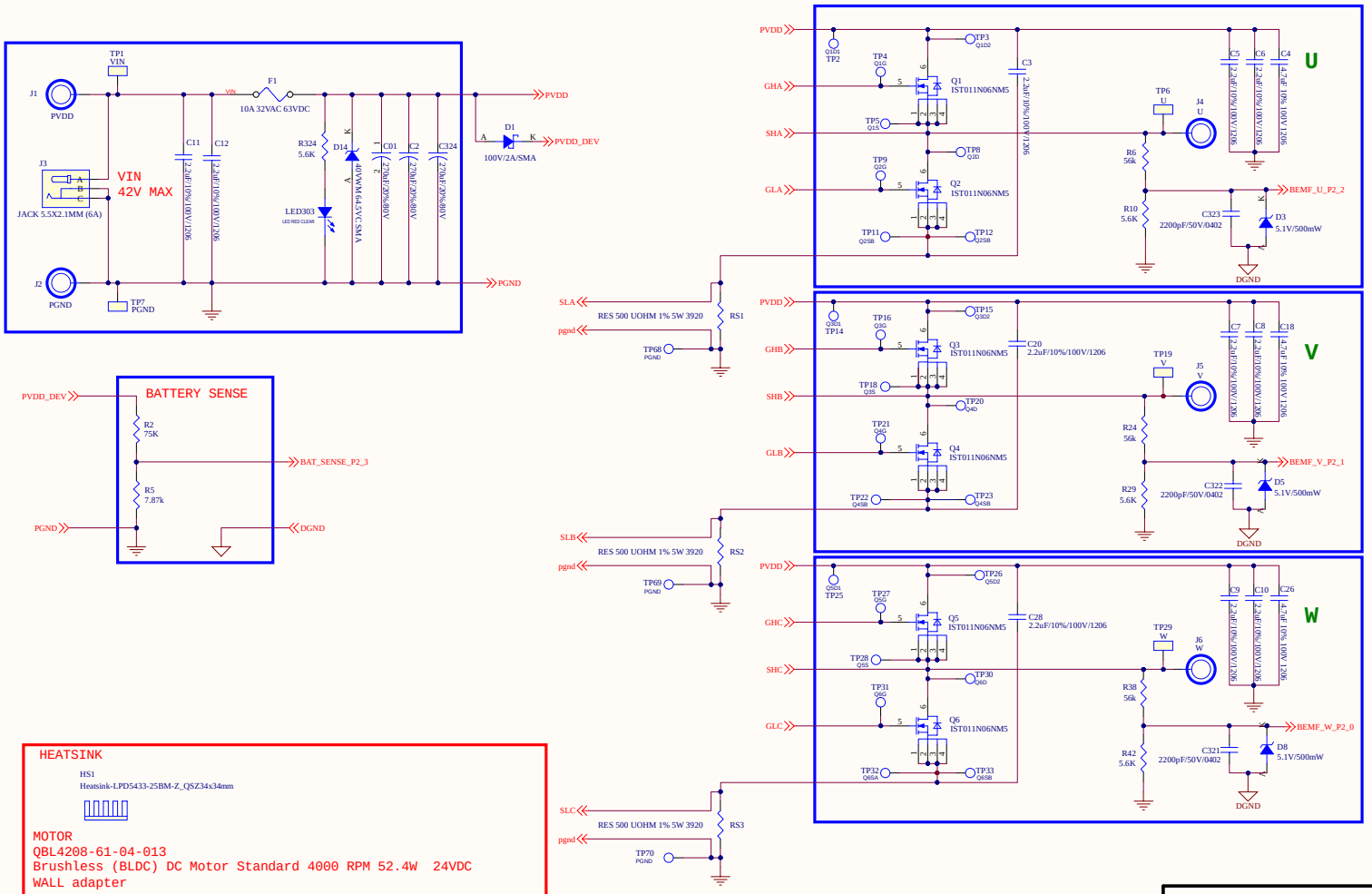

Infineon Technologies AG
101 N. Pacific Coast HWY, El Segundo, CA 90245

Title:	EVAL_6EDL7141_FOC_3SH
Revision:	V2.2
Document Name:	INVERTER.SchDoc
Drawn By:	SV
Approved By:	BD
Current Date:	12/11/2022 Current Time: 2:07:55 PM
Size:	C Sheet: 2 of 4

Added Offpage connectors



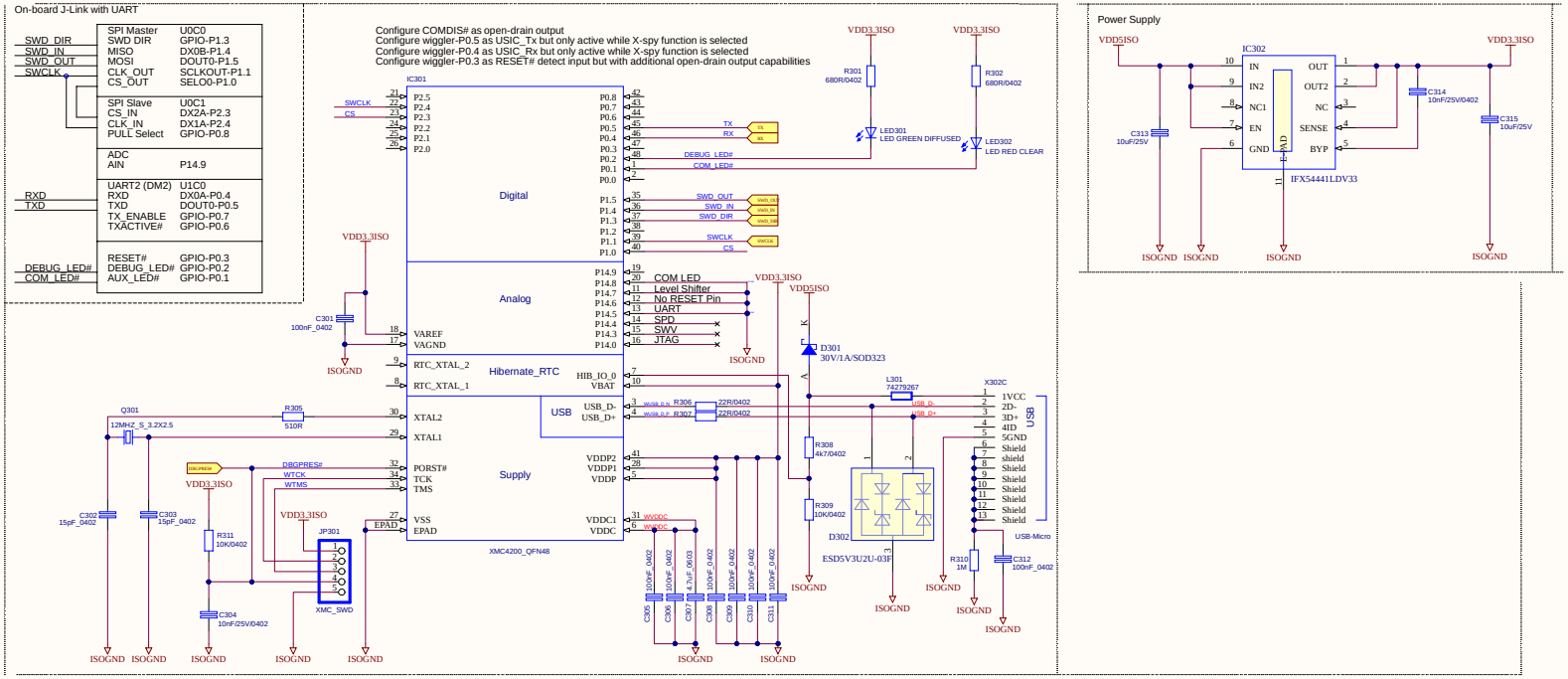

Segger J-Link OBD
This board includes an On-Board-Debugger (OBD) using a XMC microcontroller plus J-link SW from Segger. THe license usage of this OBD with J-Link SW is limited to this evaluation board.

Infineon Technologies AG
101 N. Pacific Coast Hwy, El Segundo, CA 90245

Title:	EVAL_6EDL7141_FOC_3SH
Revision:	V2.2
Document Name:	J-Link_UART.SchDoc
Drawn By:	SV
Approved By:	BD
Current Date:	12/11/2022 Current Time: 2:07:55 PM
Size:	C Sheet: 3 of 4

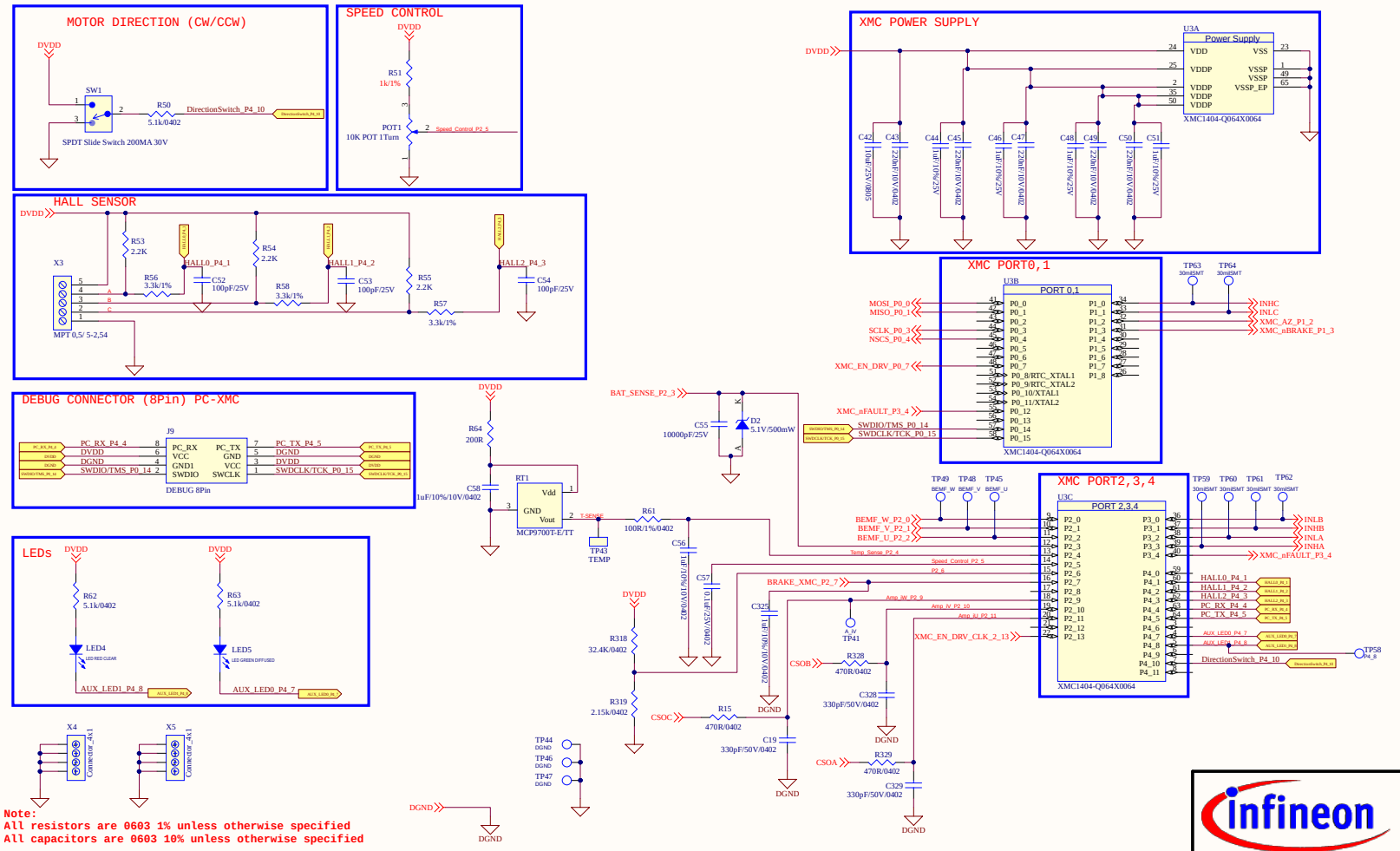

Infineon Technologies AG
IFAG DES S PS

Title:	EVAL_6EDL7141_FOC_3SH
Revision:	V2.2
Document Name:	XMC.SchDoc
Drawn By:	SV
Approved By:	BD
Current Date:	12/11/2022 Current Time: 2:07:55 PM
Size:	C Sheet: 4 of 4