Power Board Analog_V1.0.SchDoc

Connector to control card

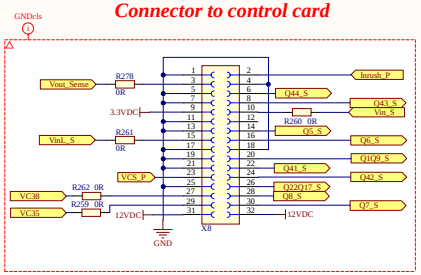

Connector to center aux DC and gate driver card

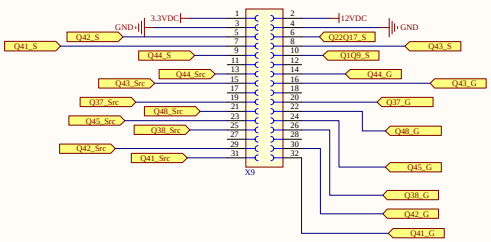

Connector to side aux DC and gate driver cards

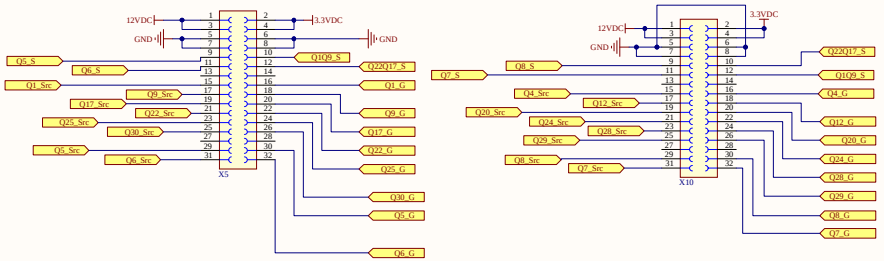

Vout voltage sensor

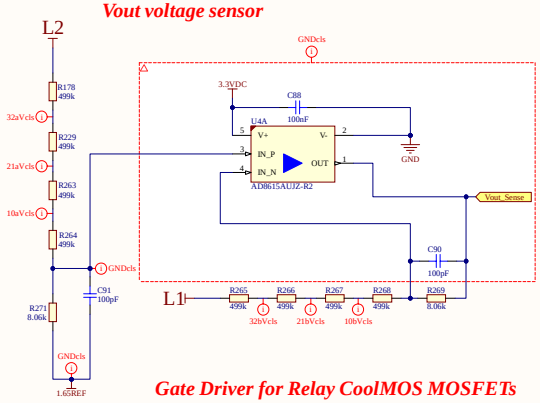

Input voltage protection: UV, OV for whole DC input

Input voltage protection: UV, OV for lower side input

VH=480V, VL=420V for overvoltage threshoulds,//VH=384V, VL=360V for undervoltage threshoulds

Phase (a) flying capacitor voltage sensor

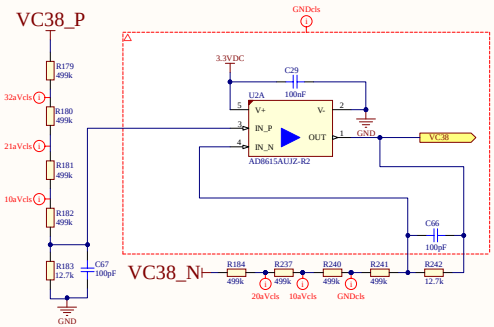

Gate Driver for Relay CoolMOS MOSFETs

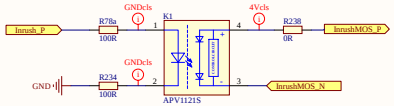

12 Volts aux power supply input

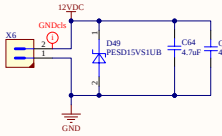

5 V power for Current Sensor

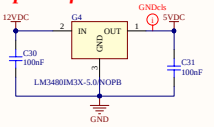

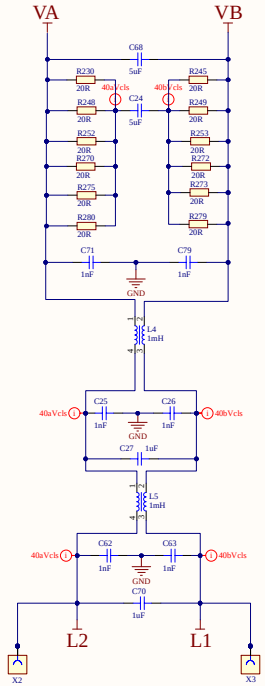

Phase (b) flying capacitor voltage sensor

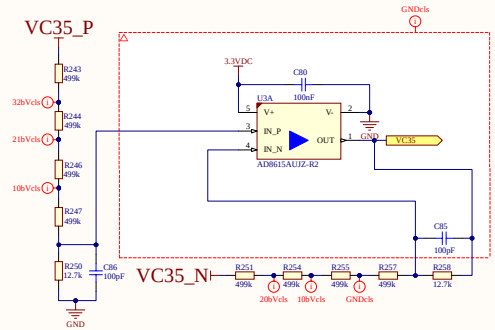

DC 12V to 3.3V buck regulator

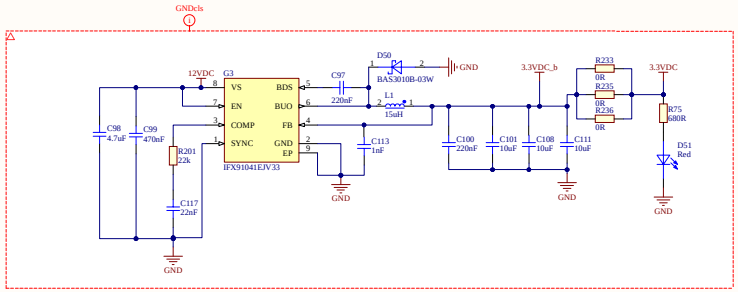

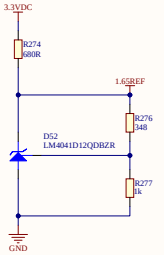

Release Confidential

Infineon Technologies PSS DCDC 101 N. Pacific Coast Highway El Segundo, CA 90245, USA	
Title: Main board	
Variant: [No Variations]	Approved: PG
Size: A2 — Document Name: Power Board Analog_V1.0.SchDoc	Rel.: KK — Rev.: 1.0
Author: Kasra Khazraei	
Date: 12/21/2022 Time: 12:41:42 PM	SVN Revision: Not in version control
Copyright Infineon Technologies 2022	Sheet 1 of 2

Power Board Power_V1.0.SchDoc

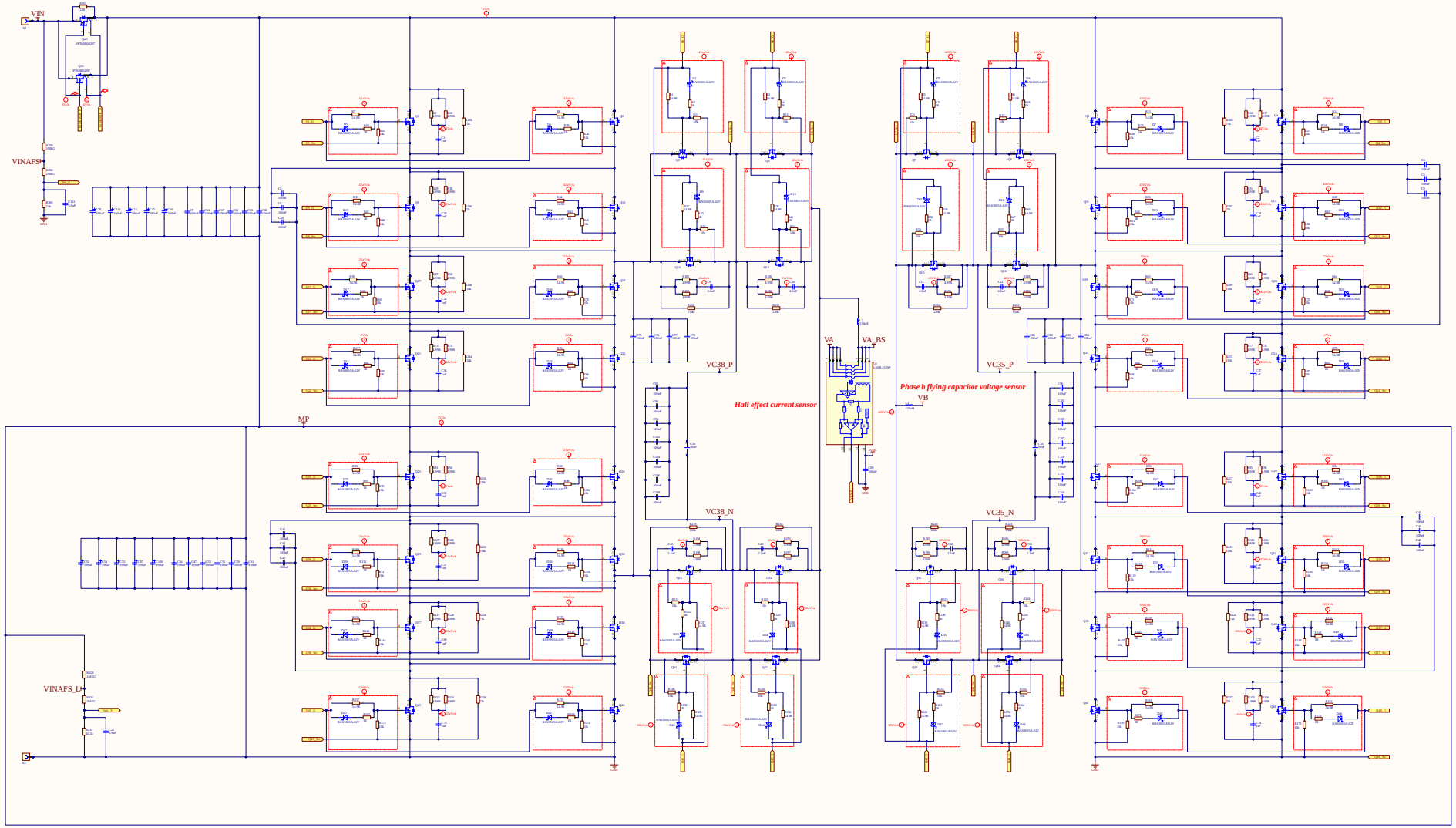

Release Confidential

Infineon Technologies PSS DC.DC
101 N. Pacific Coast Highway
El Segundo, CA 90245, USA

Title	Main board		
Size	[No Variations]	Approved	PG
Sheet	Power Board Power_V1.0.SchDoc	Rev	
A0		KK	1.0

Copyright Infineon Technologies
Unless Otherwise Stated, Copyright Infineon Technologies 2007
Date: 1/11/2007 Time: 11:21:41 AM
SVN Revision: No Revision Control
Copyright Infineon Technologies 2007
Sheet 1 of 1