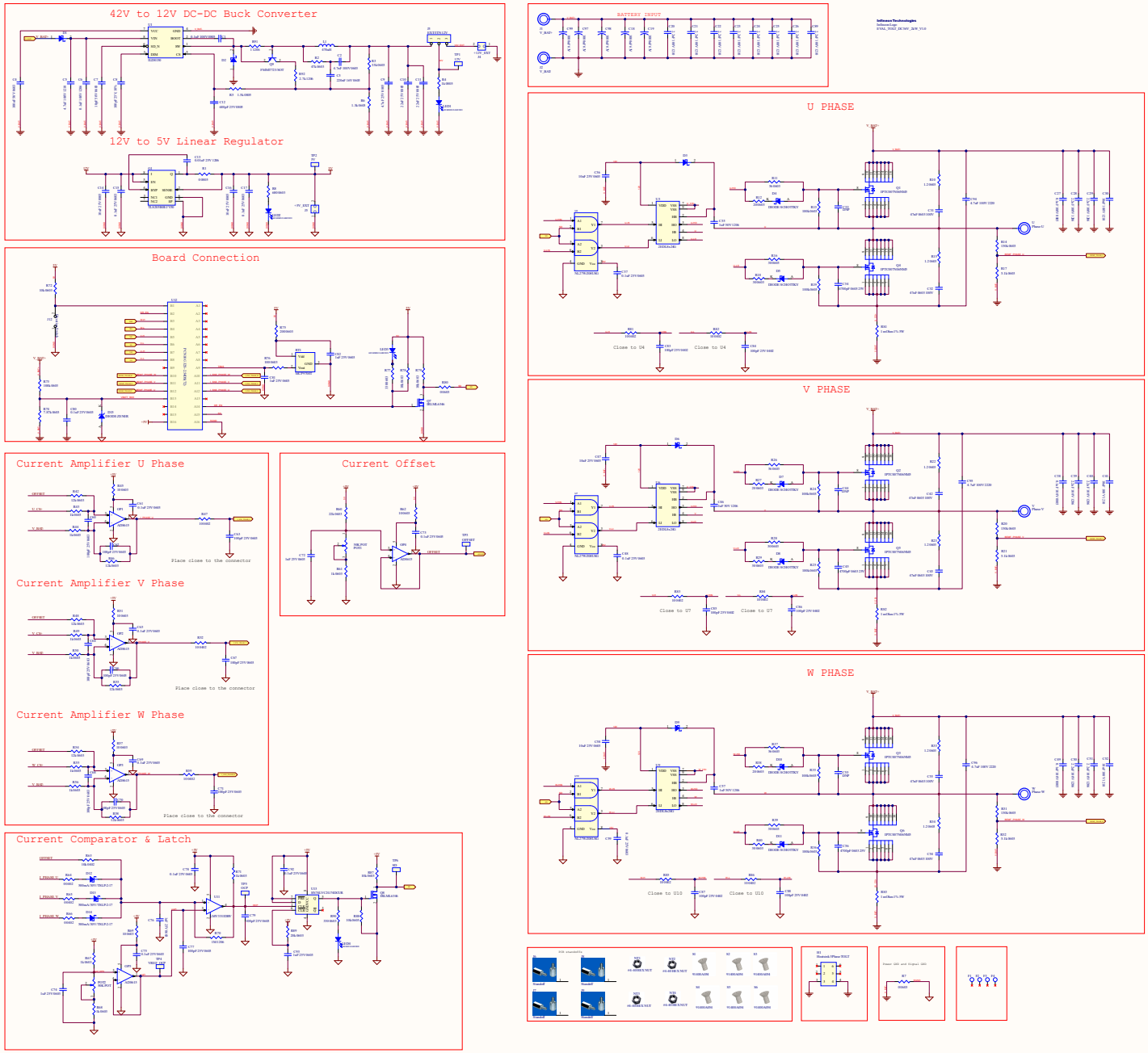

Infineon Technologies
2015 N. Pacific Coast/SPWY, El Segundo, CA 90245