Index

Page	Schematics Page Name
01	Cover Sheet / Revision History
02	Top Level
03	
04	
05	
06	
07	
08	
09	
10	

01_Revision_History_Card_Rev-C.SchDoc

Revision History

Rev.	Rel.	Date	Author	Description	Page(s)
A	1	2018-3-26	PBG	- Initial design	
B	1	2018-10-26	PBG	- Modified relay polarity and made corrections	
C	1	2019-4-26	PBG	- Added output voltage feedback	

DEMO_850W_12VDC_230VAC Control card

Basic controller

Rev: C1

PSS DCDC PD TM AE2 BPA LP
101 N. Pacific Coast Highway
El Segundo, CA 90275.

2022

Link to Top Level Document

02 Top Level
02_Top_Level-Card_Rev-C.SchDoc

LEGAL DISCLAIMER
THE INFORMATION GIVEN IN THIS DOCUMENT IS GIVEN FOR ILLUSTRATING PURPOSES ONLY. THE RECIPIENT OF THIS DOCUMENT MUST VERIFY ANY FUNCTION DESCRIBED HEREIN IN THE REAL APPLICATION. INFINEON TECHNOLOGIES HEREBY DISCLAIMS ANY AND ALL WARRANTIES AND LIABILITIES OF ANY KIND (INCLUDING WITHOUT LIMITATION WARRANTIES OF NON-INFRINGEMENT OF INTELLECTUAL PROPERTY RIGHTS OF ANY THIRD PARTY) WITH RESPECT TO ANY AND ALL INFORMATION GIVEN IN THIS DOCUMENT.

Preliminary
Confidential

PSS DCDC PD TM AE2 BPA LP
101 N. Pacific Coast Highway
El Segundo, CA 90275.

Title	DEMO_850W_12VDC_230VAC Control card		
Variant	[No Variations]	Approved	PBG
Size: A3	Document Name: 01_Revision_History_Card_Rev-C.SchDoc	Rel. PBG	Rev. C1
Author: PBG			
Date: 8/17/2022 Time: 2:49:40 PM	SVN Revision: Not in version control		
(C) Infineon Technologies 2019	Sheet 1 of 2		

02_Top_Level-Card_Rev-C1.SchDoc

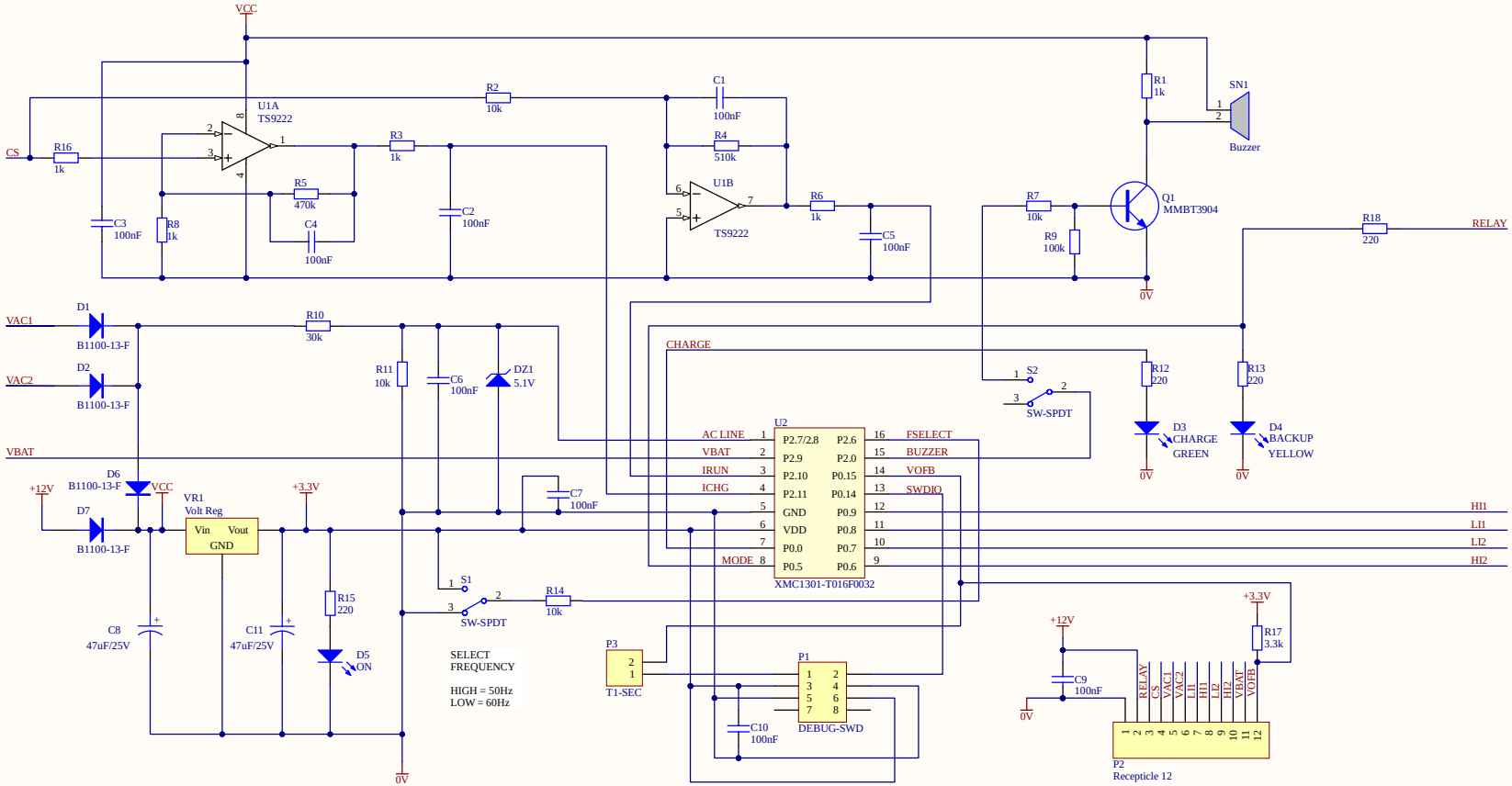

Preliminary
Confidential

Infineon	**PSS DCDC PD TM AE2 BPA LP** **101 N. Pacific Coast Highway** El Segundo, CA 90275.		
Title	DEMO_850W_12VDC_230VAC Control card		
Variant	[No Variations]	Approved	<Appr.>
Size: A3	Document Name: 02_Top_Level-Card_Rev-C1.SchDoc	Rel.: PBG	Rev.: C1
Author: PBG			
Date: 8/17/2022 Time: 2:49:40 PM	SVN Revision: Not in version control		
(C) Infineon Technologies 2019	Sheet 2 of 2		