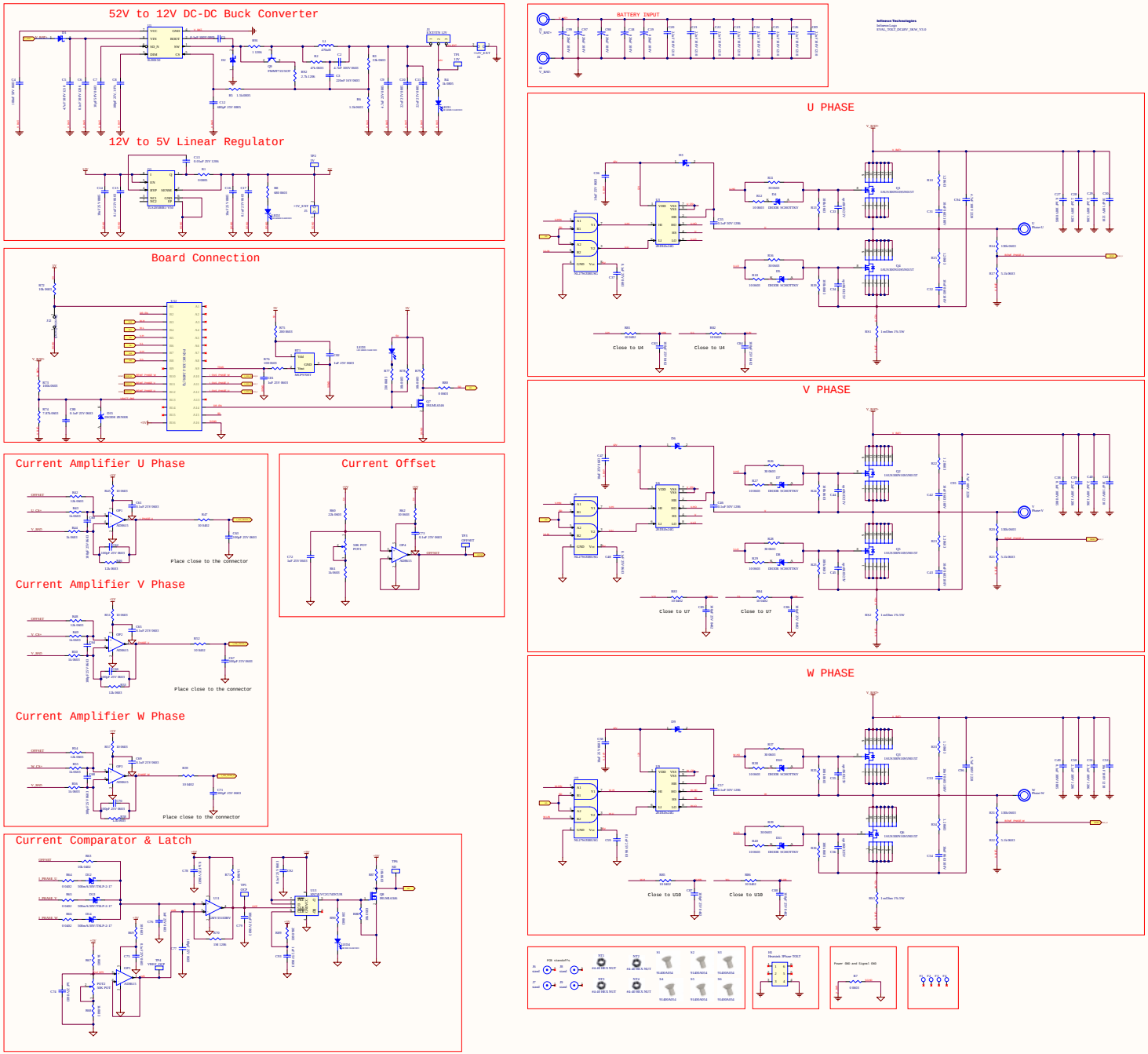
52V to 12V DC-DC Buck Converter
12V to 5V Linear Regulator
Board Connection
Current Amplifier U Phase
Current Amplifier V Phase
Current Amplifier W Phase
Current Offset
Current Comparator & Latch
BATTERY INPUT
U PHASE
V PHASE
W PHASE
Place close to the connector
Close to U4
Close to U7
Close to U10
Infineon Technologies