THIS DOCUMENT AND THE DATA DISCLOSED HEREIN OR HEREWITH IS THE PROPERTY OF INFINEON TECHNOLOGIES

VARIANT NAME		REV
[No Variations]		*

REVISION	TITLE	DATE	APPROVED
*	12 kW AI Rectifier		

Energy buffer electrolytic capacitors

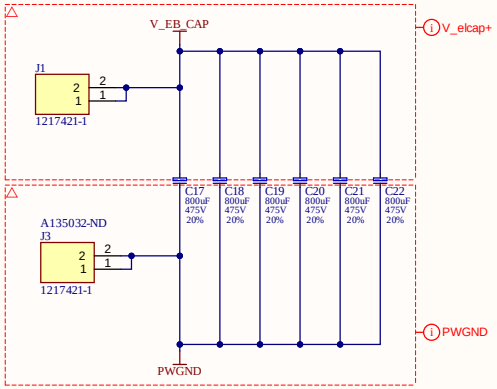

DC bulk capacitance connection:
- Energy buffer electrolytic capacitors:
  6x TDK EPCOS B43658-A 807-M52
  800 µF / 475 V

Front panel LEDs

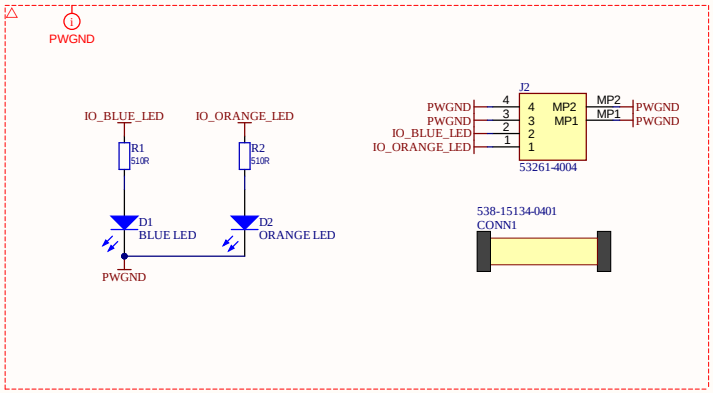

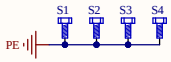

Infineon Technologies Austria AG assumes no liability for re-use, application, customer product design or infringement of patents related to the present material.
and is not considered by Infineon Technologies Austria AG to be part of a finished end product for general consumer uses.
This Evaluation Board/Kit/Module/Layout is intended for use for ENGINEERING DEVELOPMENT, DEMONSTRATION, OR EVALUATION PURPOSES ONLY

APPROVALS	DATE
ENG: SAE	
DSN: *	
CHK: *	

PROJECT
NBIP00001547

TITLE
12 kW AI Rectifier
PW400001549

SIZE	COMMENTS	REV
A3		*

VARIANT: [No Variations]
SHEET * OF 1