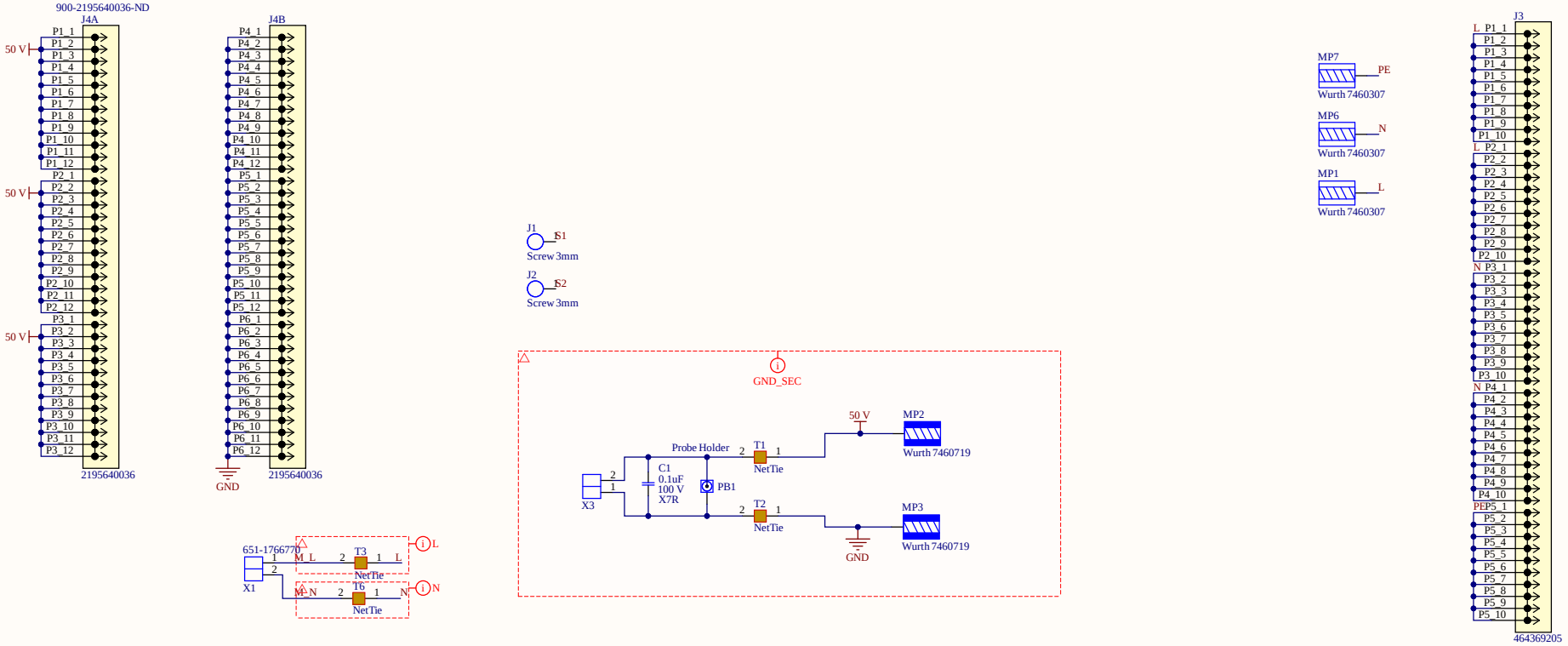

Infineon Technologies Austria AG assumes no liability for re-use, application, customer product design or infringement of patents related to the present material.
and is not considered by Infineon Technologies Austria AG to be part of a finished end product for general consumer uses.
This Evaluation Board/Kit/Module/Layout is intended for use for ENGINEERING DEVELOPMENT, DEMONSTRATION, OR EVALUATION PURPOSES ONLY