THIS DOCUMENT AND THE DATA DISCLOSED HEREIN OR HEREWITH IS THE PROPERTY OF INFINEON TECHNOLOGIES

REVISION	TITLE	DATE	APPROVED
1	12 kW AI Rectifier		

PFC HF leg phase1 + phase2

PFC SR leg

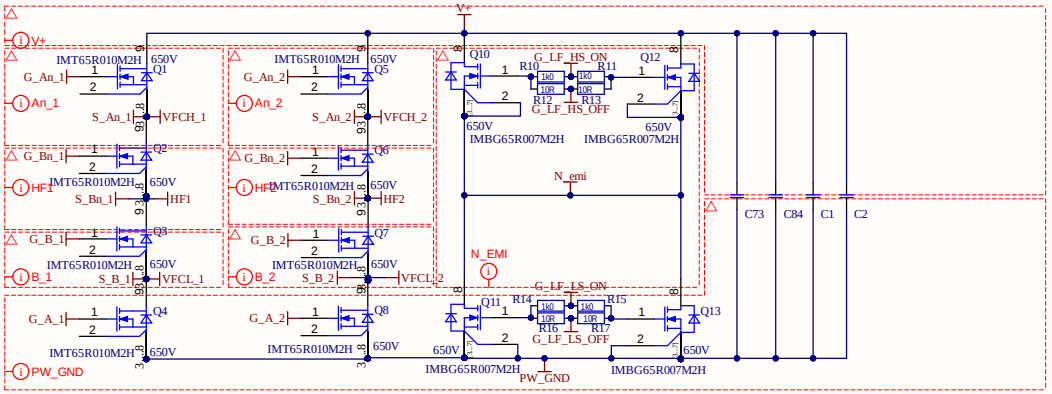

Flying capacitors phase1 + phase2 and V_FCLi sensing

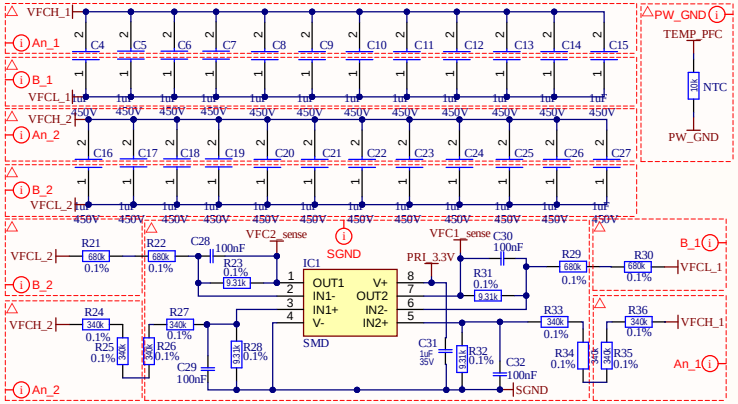

Phase 1 driving stage

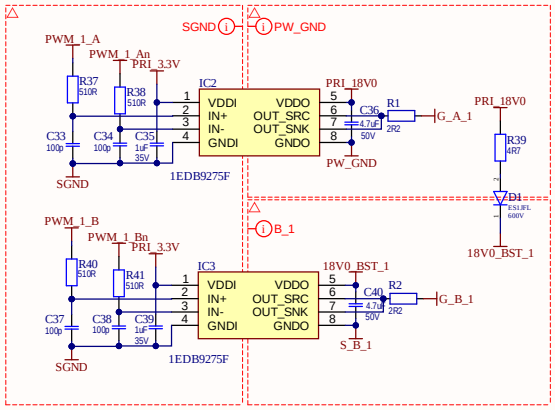

Phase 2 driving stage

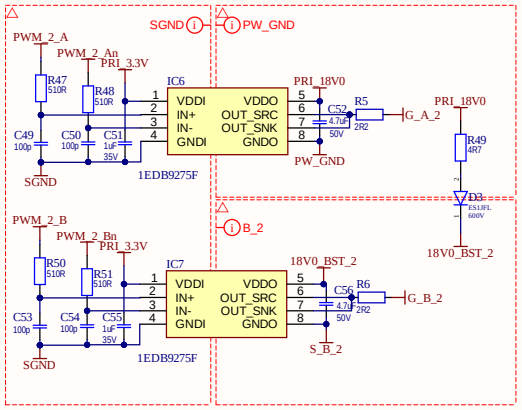

PFC SR MOSFETs driving stage

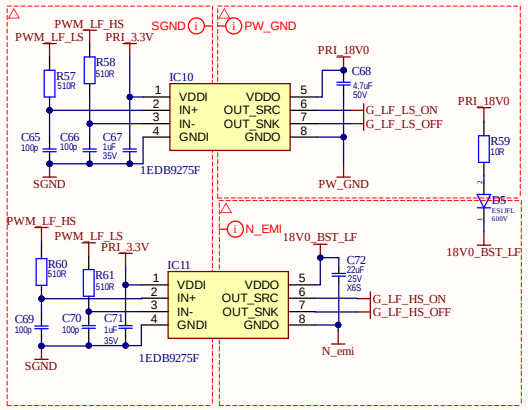

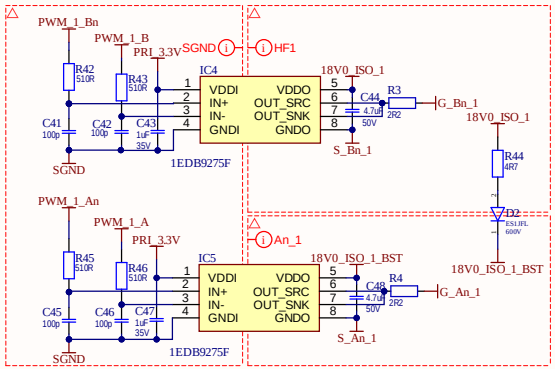

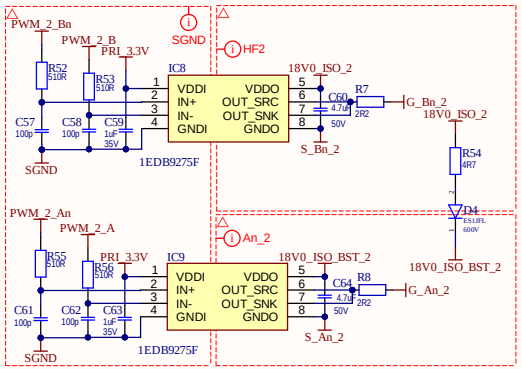

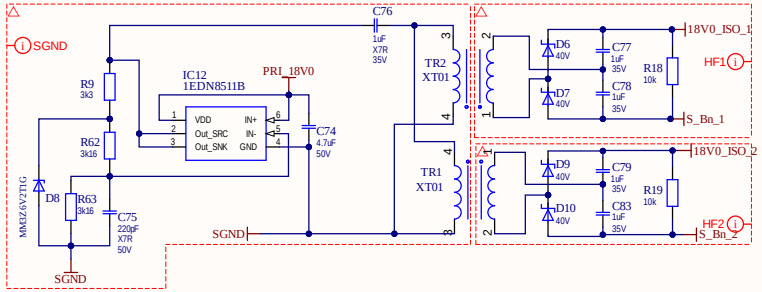

Infineon Technologies Austria AG assumes no liability for re-use, application, customer product design or infringement of patents related to the present material.
and is not considered by Infineon Technologies Austria AG to be part of a finished end product for general consumer uses.
This Evaluation Board/Kit/Module/Layout is intended for use for ENGINEERING DEVELOPMENT, DEMONSTRATION, OR EVALUATION PURPOSES ONLY

APPROVALS	DATE
ENG: SAE	
DSN: *	
CHK: *	

PROJECT: NBIP00001547

TITLE: 12 kW AI Rectifier
PW200001549

SIZE: A3 | COMMENTS | REV: 1

VARIANT: [No Variations] | SHEET | OF