THIS DOCUMENT AND THE DATA DISCLOSED HEREIN OR HEREWITH IS THE PROPERTY OF INFINEON TECHNOLOGIES

REVISION	TITLE	DATE	APPROVED
*	12 kW AI Rectifier		

Primary/secondary reinforced isolation

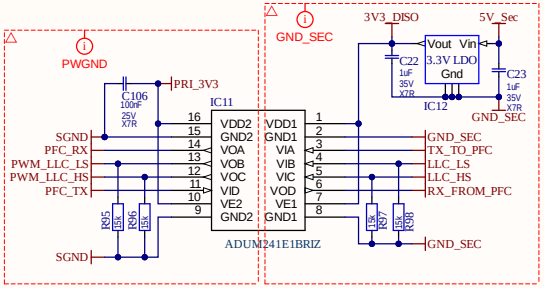

Flyback auxiliary supply

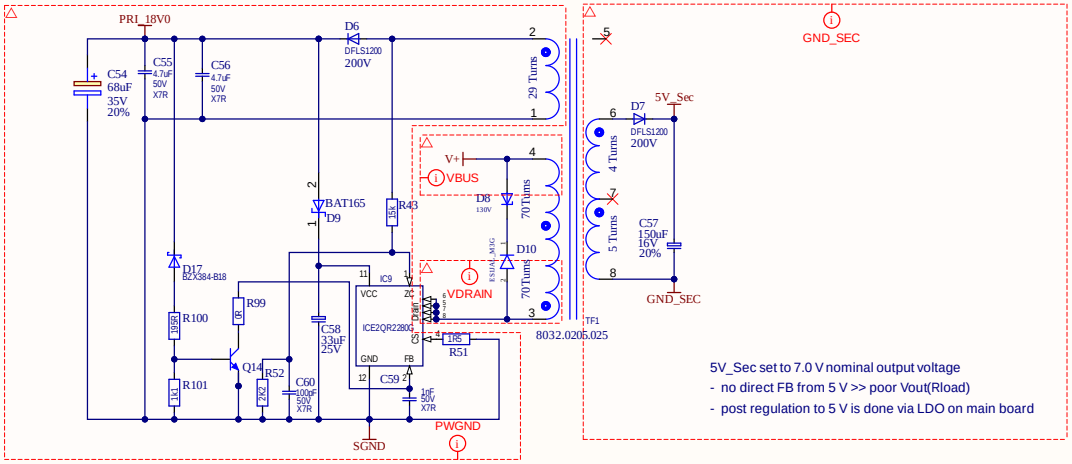

5V_Sec set to 7.0 V nominal output voltage
- no direct FB from 5 V >> poor Vout(Rload)
- post regulation to 5 V is done via LDO on main board

APPROVALS	DATE
ENG: SAE	
DSN: *	
CHK: *	

PROJECT: NBIP00001547

TITLE: 12 kW AI Rectifier
PW100001548

SIZE	COMMENTS	REV
A3		*

VARIANT: [No Variations] SHEET 1 OF 3

Infineon Technologies Austria AG assumes no liability for re-use, application, customer product design or infringement of patents related to the present material.
and is not considered by Infineon Technologies Austria AG to be part of a finished end product for general consumer uses.
This Evaluation Board/Kit/Module/Layout is intended for use for ENGINEERING DEVELOPMENT, DEMONSTRATION, OR EVALUATION PURPOSES ONLY

THIS DOCUMENT AND THE DATA DISCLOSED HEREIN OR HEREWITH IS THE PROPERTY OF INFINEON TECHNOLOGIES

REVISION	TITLE	DATE	APPROVED
*	12 kW AI Rectifier		

Primary 3.3 V supply and led indicators

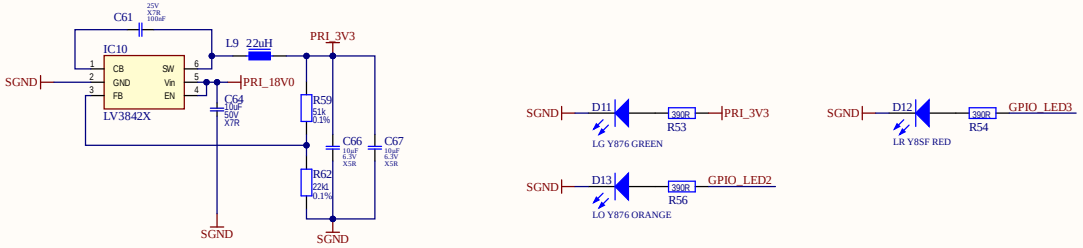

XMC uCTRL supply

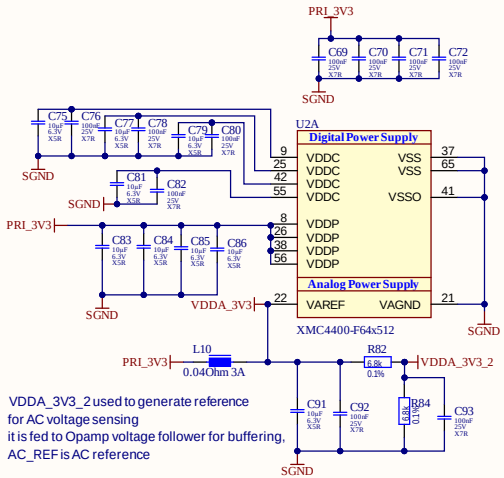

VDDA_3V3_2 used to generate reference
for AC voltage sensing
it is fed to Opamp voltage follower for buffering,
AC_REF is AC reference

XMC uCTRL digital pins

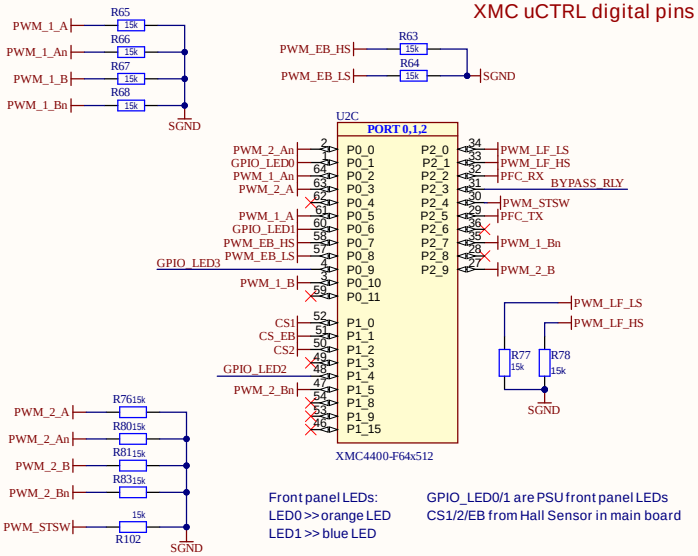

Front panel LEDs:
LED0 >> orange LED
LED1 >> blue LED

GPIO_LED0/1 are PSU front panel LEDs
CS1/2/EB from Hall Sensor in main board

XMC XTAL and programming connector

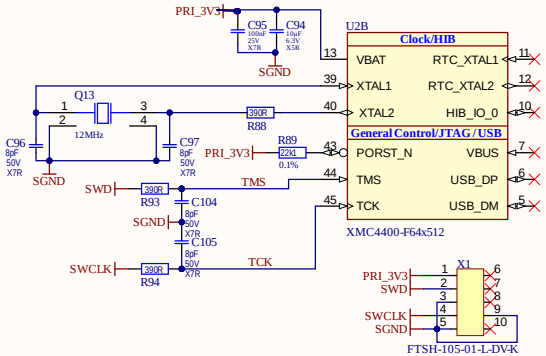

XMC ADC inputs

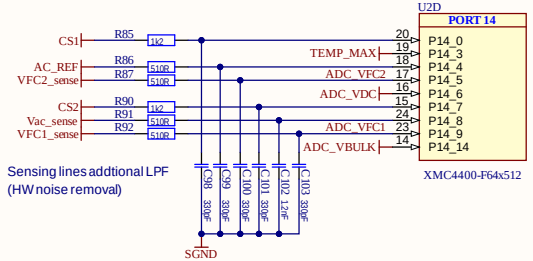

Sensing lines addtional LPF
(HW noise removal)

HV AC sensing (after EMI filter)

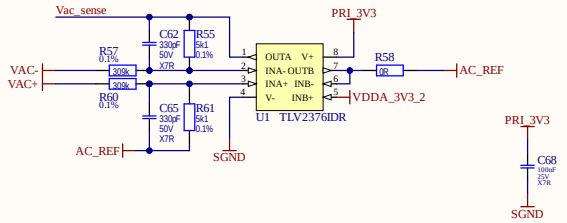

AC sensing voltage attenuation: (5*309k)/(5.1k) =302.94 ; (5.1k)/(5*309k) = 0.003300971

HV DC sensing



End of HV DC sensing resistive divider, plus RC LPF

Temperature sensing

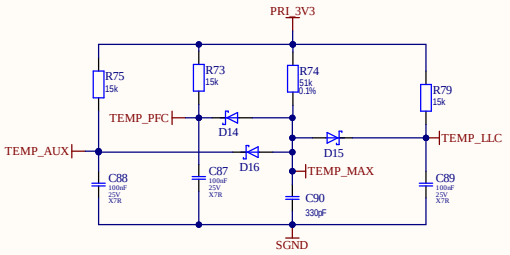

ORing of PFC/LLB/EB temperature measurements
to reduce XMC ADC pins used, NTC connected to SGND on main board and power board

Infineon Technologies Austria AG assumes no liability for re-use, application, customer product design or infringement of patents related to the present material.
and is not considered by Infineon Technologies Austria AG to be part of a finished end product for general consumer uses.
This Evaluation Board/Kit/Module/Layout is intended for use for ENGINEERING DEVELOPMENT, DEMONSTRATION, OR EVALUATION PURPOSES ONLY

APPROVALS	DATE
ENG: SAE	
DSN: *	
CHK: *	

PROJECT: NBIP00001547

TITLE: 12 kW AI Rectifier
PW100001548

SIZE: A3 | COMMENTS | REV: *

VARIANT: [No Variations] | SHEET 1 OF 3

THIS DOCUMENT AND THE DATA DISCLOSED HEREIN OR HEREWITH IS THE PROPERTY OF INFINEON TECHNOLOGIES

REVISION	TITLE	DATE	APPROVED
*	12 kW AI Rectifier		

LLC primary power stage + drivers

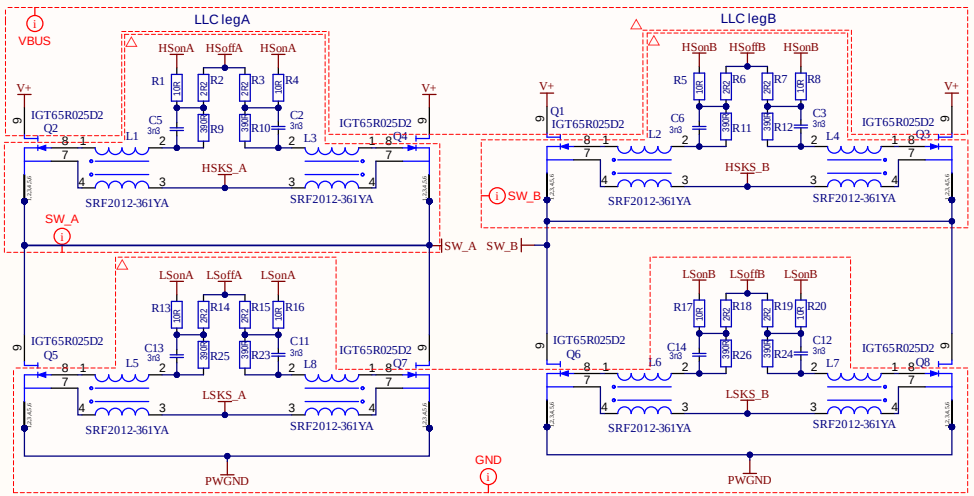

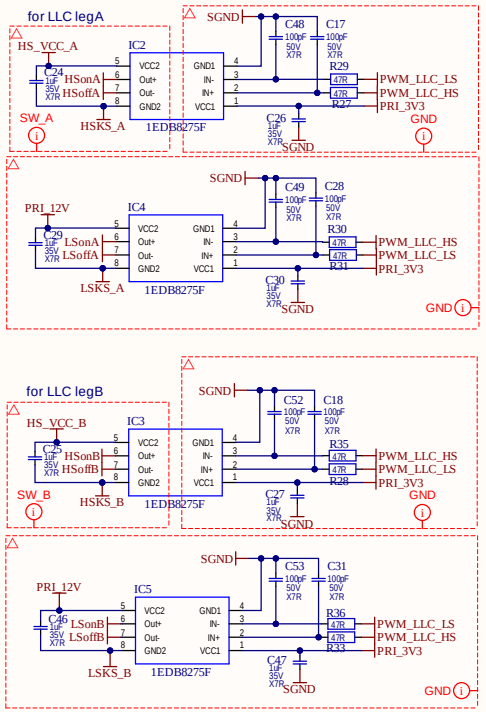

LLC primary and energy buffer bias

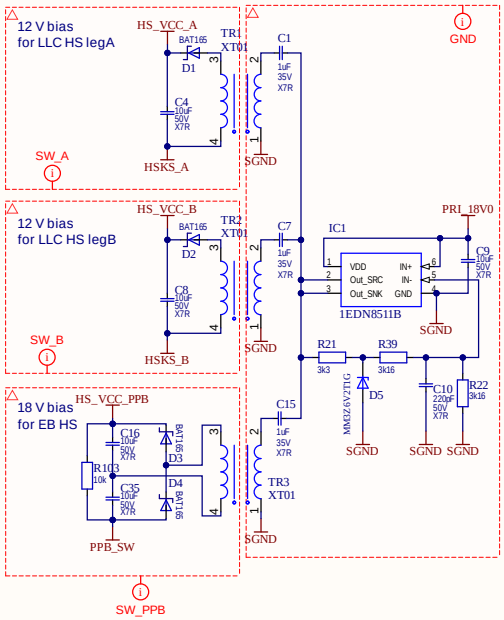

Energy buffer power stage + drivers

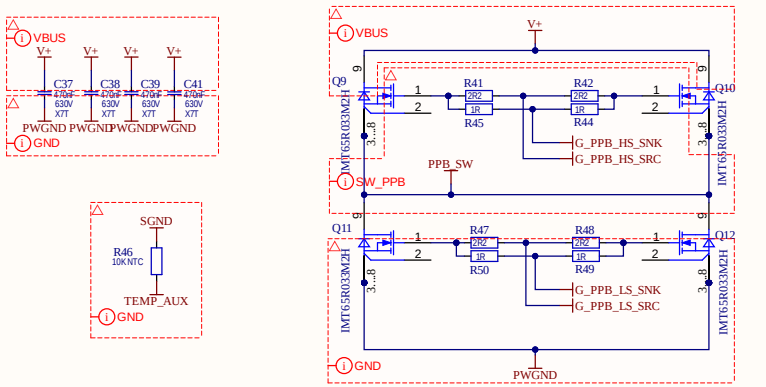

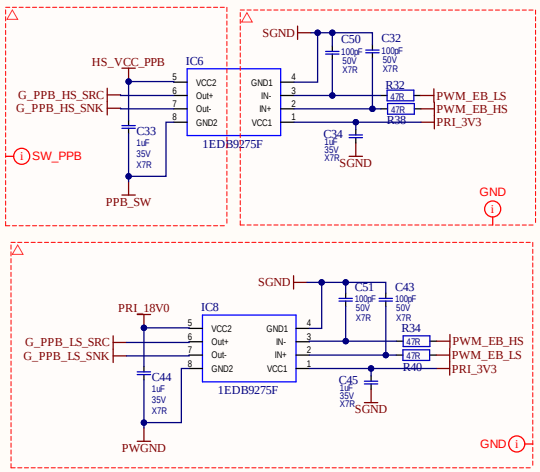

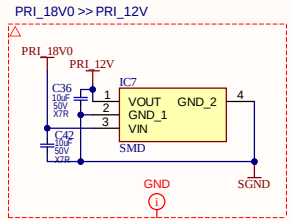

APPROVALS	DATE
ENG: SAE	
DSN: *	
CHK: *	

PROJECT: NBIP00001547

TITLE: 12 kW AI Rectifier
PW100001548

SIZE: A3 | COMMENTS | REV: *

VARIANT: [No Variations] | SHEET 1 OF 3

Infineon Technologies Austria AG assumes no liability for re-use, application, customer product design or infringement of patents related to the present material.
and is not considered by Infineon Technologies Austria AG to be part of a finished end product for general consumer uses.
This Evaluation Board/Kit/Module/Layout is intended for use for ENGINEERING DEVELOPMENT, DEMONSTRATION, OR EVALUATION PURPOSES ONLY