THIS DOCUMENT AND THE DATA DISCLOSED HEREIN OR HEREWITH IS THE PROPERTY OF INFINEON TECHNOLOGIES

REVISION	TITLE	DATE	APPROVED
1	12 kW AI Rectifier		

Input fuses, surge protection and EMI filter

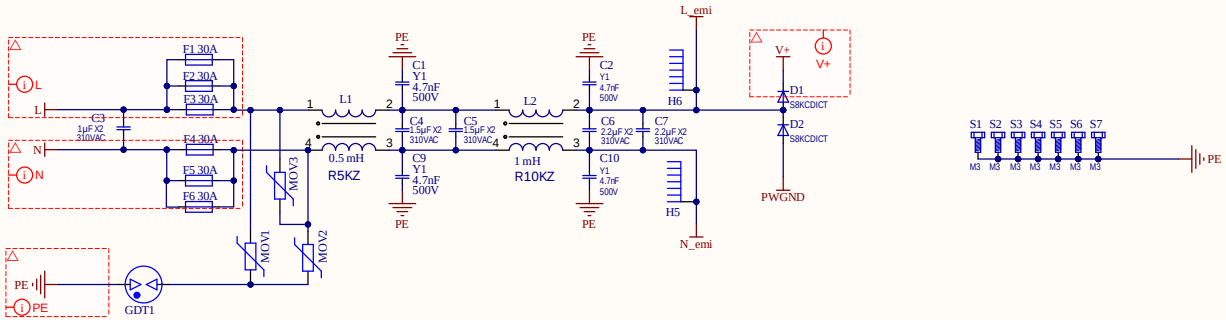

3L PFC and Energy buffer inductors and current sensing

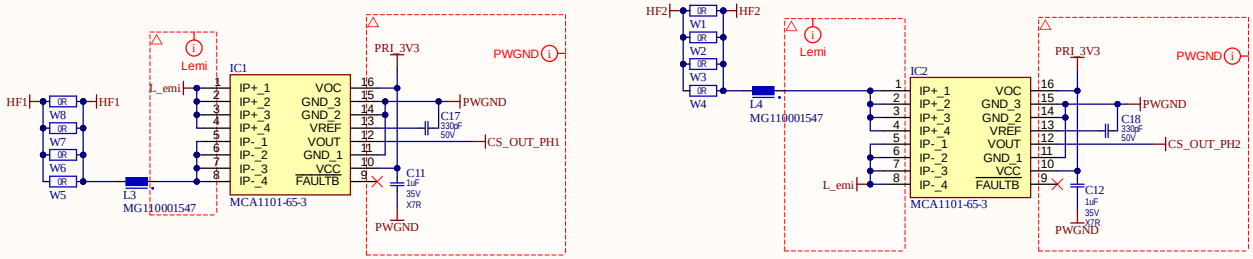

MCA1101-65-3 and current sensing circuitry details:
- MCA1101-65-3 maximum current +/-65 A, 20 mV/A gain, Vout_os=1.5 V analog output offset
- Analog signal filtering implemented close to PFC controller, on the LLC power card (PW100001548)

MG110001547 PFC chokes details:
- 2x powder cores, Chang Sung CH270060GT, µ60, high-flux GT cores
- Windings: Enameled wire, 27 turns, 1.8 mm diameter
- Inductance: 109 µH at 0 A current

MG200001427 PFC chokes details:
- 2x powder cores, Chang Sung CH270060GT, µ60, high-flux GT cores
- Windings: Enameled wire, 39 turns, 1.6 mm diameter
- Inductance: 230 µH at 0 A current

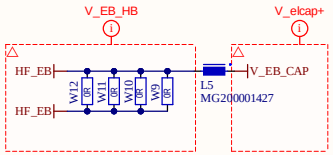

Energy buffer bypass switch + bias supply and surge capacitor board

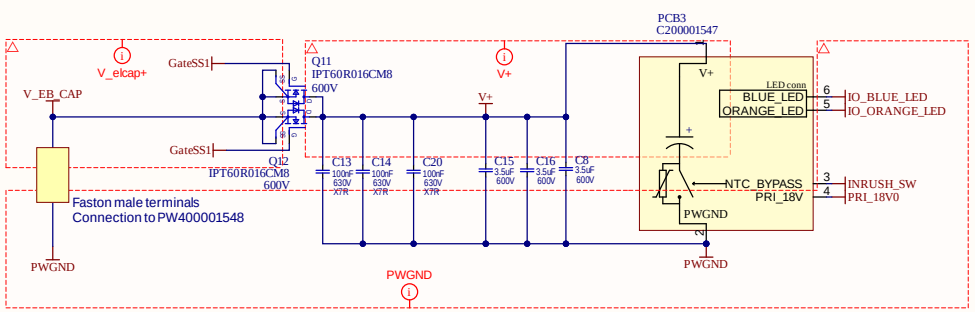

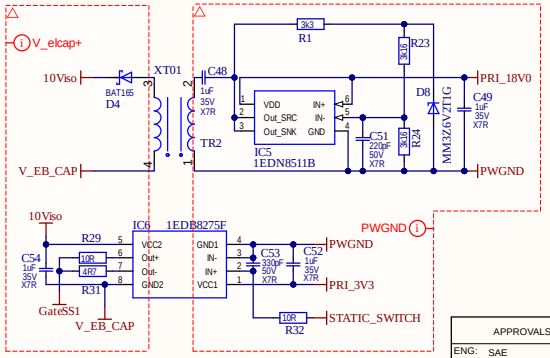

DC bulk capacitance connection:
- Energy buffer electrolytic capacitors:
  6x TDK EPCOS B43658-A 807-M52
  800 µF / 475 V

Power connectors (DC + AC)

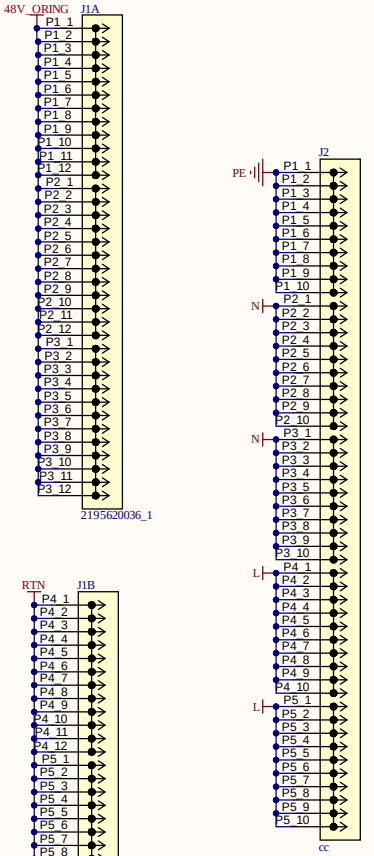

Infineon Technologies Austria AG assumes no liability for re-use, application, customer product design or infringement of patents related to the present material.
and is not considered by Infineon Technologies Austria AG to be part of a finished end product for general consumer uses.
This Evaluation Board/Kit/Module/Layout is intended for use for ENGINEERING DEVELOPMENT, DEMONSTRATION, OR EVALUATION PURPOSES ONLY

APPROVALS	DATE
ENG: SAE	
DSN: *	
CHK: *	

PROJECT: NBIP00001547

TITLE: 12 kW AI Rectifier
M100001548

SIZE	COMMENTS	REV
A3		1

VARIANT: [No Variations] SHEET 1 OF 3

THIS DOCUMENT AND THE DATA DISCLOSED HEREIN OR HEREWITH IS THE PROPERTY OF INFINEON TECHNOLOGIES

REVISION	TITLE	DATE	APPROVED
SAE	12 kW AI Rectifier		

LLC DC/DC converter from 445 V to 50 V output

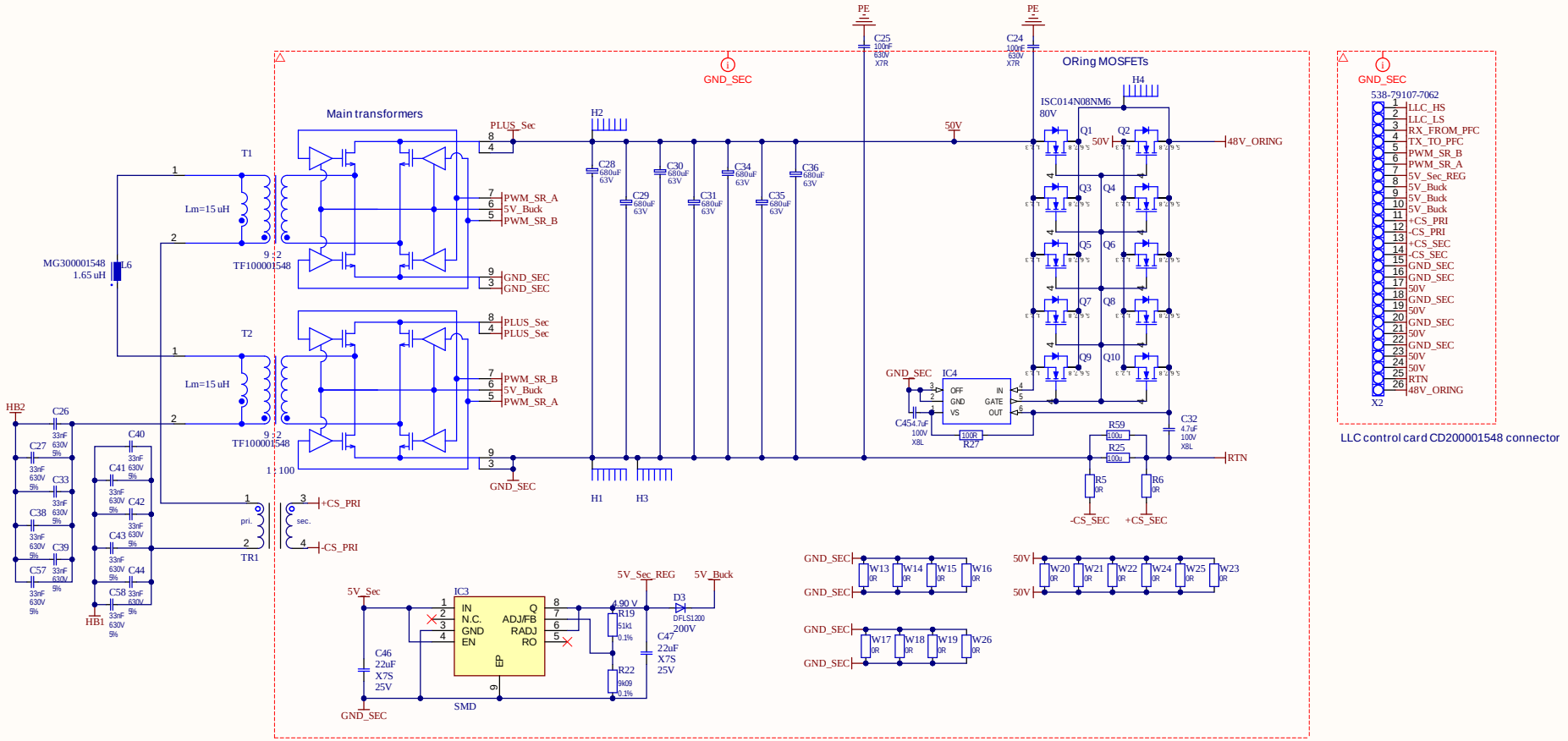

LLC control card CD200001548 connector

Infineon Technologies Austria AG assumes no liability for re-use, application, customer product design or infringement of patents related to the present material.
and is not considered by Infineon Technologies Austria AG to be part of a finished end product for general consumer uses.
This Evaluation Board/Kit/Module/Layout is intended for use for ENGINEERING DEVELOPMENT, DEMONSTRATION, OR EVALUATION PURPOSES ONLY

APPROVALS	DATE
ENG: SAE	
DSN: *	
CHK: *	

PROJECT: CC

TITLE: 12 kW AI Rectifier
M100001548

SIZE	COMMENTS	REV
A3		SAE

VARIANT: [No Variations] SHEET 2 OF 3

THIS DOCUMENT AND THE DATA DISCLOSED HEREIN OR HEREWITH IS THE PROPERTY OF INFINEON TECHNOLOGIES

REVISION	TITLE	DATE	APPROVED
1	12 kW AI Rectifier		

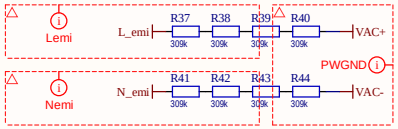

AC sensing
- Resistive divider: 5x 309 kOhm resistors total
- 1x 309kOhm, amplification and filtering are done on PW200001548

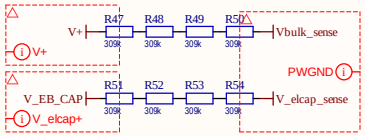

Vdcp and Vbulk DC voltage sensing
- Resistive divider: 5x 309 kOhm resistors total
- 1x 309kOhm, amplification and filtering are done on PW200001548
- Output is 3.05 V @ Vbulk, Vdcp = 475 V

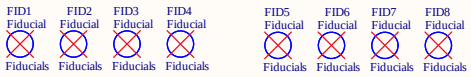

PCB1

PGND	1	PWGND
LLC_SW_A	2	HB1
V+	3	V+
PGND	4	PWGND
LLC_SW_B	5	HB2
V+	6	V+
E_BUFFER_SW	7	HF_EB
PGND	8	PWGND
PWM_LLC_LS	9	LLC_LS
GND_SEC	10	GND_SEC
PWM_LLC_HS	11	LLC_HS
TX_TO_PFC	12	TX_TO_PFC
5V_SEC	13	5V_Sec
RX_FROM_PFC	14	RX_FROM_PFC
INRUSH_SW	15	INRUSH_SW
PRI_18V0	16	STATIC_SWITCH
PWM_1_B	17	PWM_1_B
PWM_1_A	18	PWM_1_A
PWM_1_An	19	PWM_1_An
PWM_1_Bn	20	PWM_1_Bn
PWM_2_Bn	21	PWM_2_Bn
PWM_2_An	22	PWM_2_An
PWM_LF_HS	23	PWM_LF_HS
TEMP_PFC	24	TEMP_PFC
VAC-	25	VAC-
VAC+	26	VAC+
SGND	27	PWGND
PRI_18V0	28	PRI_18V0
PRI_3V3	29	PRI_3V3
VFC1_SENSE	30	VFC1_sense
PWM_2_B	31	PWM_2_B
PWM_2_A	32	PWM_2_A
PWM_LF_LS	33	PWM_LF_LS
VFC2_SENSE	34	VFC2_sense
CS2	35	CS_OUT_PH2
CS1	36	CS_OUT_PH1
VBULK_SENSE	37	Vbulk_sense
VDC_SENSE	38	V_elcap_sense
	LED0	
LED_0	LED1	IO_ORANGE_LED
LED_1		IO_BLUE_LED

PW100001548

LLC power card (PW100001548)
and PFC controller

PCB2

V+	1	V+
PGND	2	PWGND
HF_A	3	HF1
HF_B	4	HF2
V+	5	V+
PGND	6	PWGND
N_EMI	7	N_emi
V+	8	V+
PWM_1_A	9	PWM_1_A
PWM_1_An	10	PWM_1_An
PWM_1_B	11	PWM_1_B
PWM_1_Bn	12	PWM_1_Bn
VFC1_sense	13	VFC1_sense
PRI_18V0	14	PRI_18V0
PRI_3V3	15	PRI_3V3
SGND	16	PWGND
PWM_2_B	17	PWM_2_B
PWM_2_Bn	18	PWM_2_Bn
PWM_2_A	19	PWM_2_A
PWM_2_An	20	PWM_2_An
PWM_LF_LS	21	PWM_LF_LS
PWM_LF_HS	22	PWM_LF_HS
VFC2_sense	23	VFC2_sense
TEMP_PFC	24	TEMP_PFC

PW200001548

PWGND

PFC power card (PW200001548)

Infineon Technologies Austria AG assumes no liability for re-use, application, customer product design or infringement of patents related to the present material.
and is not considered by Infineon Technologies Austria AG to be part of a finished end product for general consumer uses.
This Evaluation Board/Kit/Module/Layout is intended for use for ENGINEERING DEVELOPMENT, DEMONSTRATION, OR EVALUATION PURPOSES ONLY

APPROVALS	DATE
ENG: SAE	
DSN: *	
CHK: *	

PROJECT: NBIP00001547

TITLE: 12 kW AI Rectifier
M100001548

SIZE	COMMENTS	REV
A3		1

VARIANT: [No Variations] SHEET 3 OF 3