THIS DOCUMENT AND THE DATA DISCLOSED HEREIN OR HEREWITH IS THE PROPERTY OF INFINEON TECHNOLOGIES

REVISION	TITLE	DATE	APPROVED
*	12 kW AI Rectifier		

LLC DC/DC uCTRL

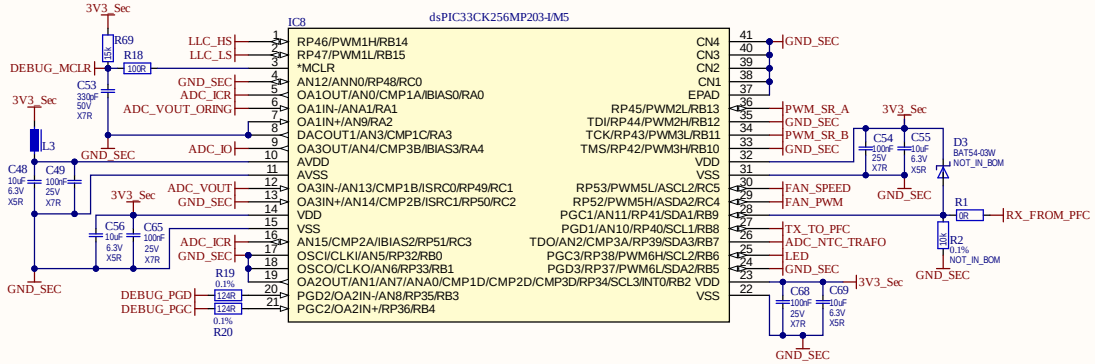

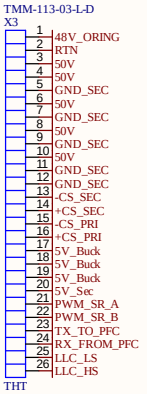

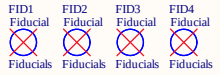



3.3 V secondary supply, primary current sense, uCTRL prog

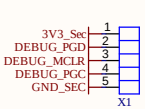

LLC uCTRL prog connector

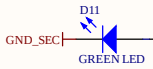

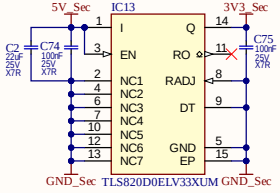

3.3 V supply

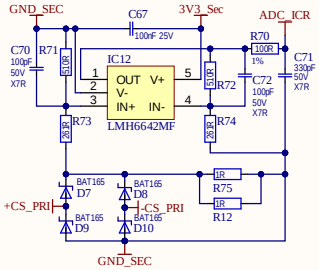

Primary current sense

5 V secondary supply for SR driving

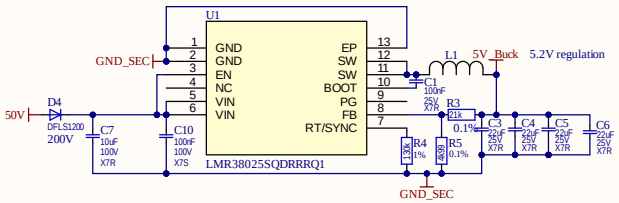

12 V secondary supply for FAN power, tacho and conn.

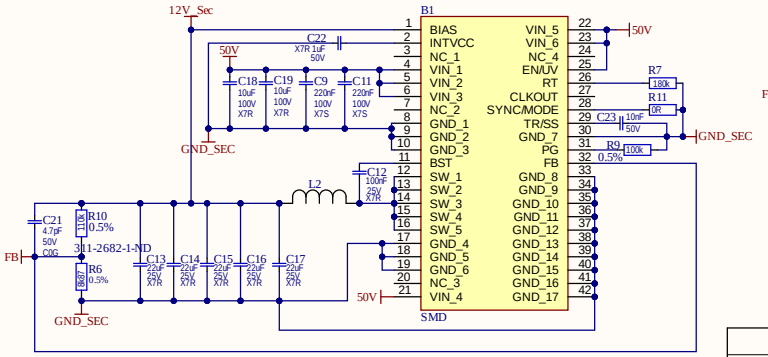

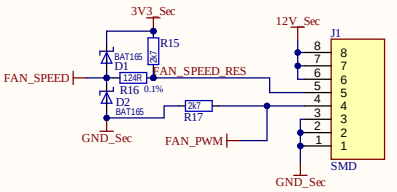

Signal conditioning

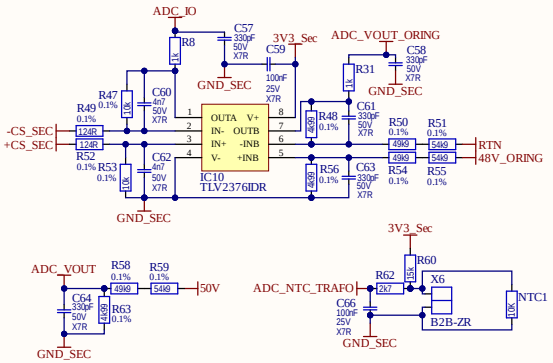

Signal conditioning

Infineon Technologies Austria AG assumes no liability for re-use, application, customer product design or infringement of patents related to the present material.
and is not considered by Infineon Technologies Austria AG to be part of a finished end product for general consumer uses.
This Evaluation Board/Kit/Module/Layout is intended for use for ENGINEERING DEVELOPMENT, DEMONSTRATION, OR EVALUATION PURPOSES ONLY

APPROVALS	DATE
ENG: SAE	
DSN: *	
CHK: *	

PROJECT: NBIP00001547

TITLE: 12 kW AI Rectifier
CD200001548

SIZE: A3 | COMMENTS | REV: *

VARIANT: [No Variations] | SHEET * OF *