THIS DOCUMENT AND THE DATA DISCLOSED HEREIN OR HEREWITH IS THE PROPERTY OF INFINEON TECHNOLOGIES

REVISION	TITLE	DATE	APPROVED
01	12 kW AI Rectifier	07.04.2025	07.04.2025

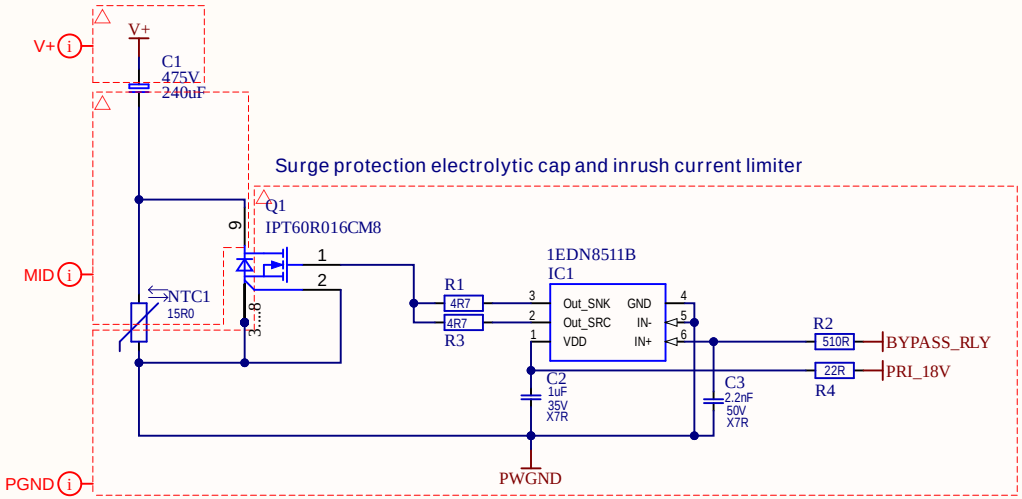

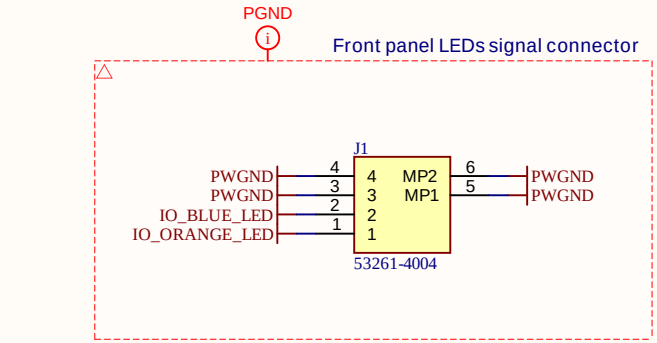

APPROVALS	DATE
ENG: SAE	07.04.2025
DSN: *	07.04.2025
CHK: *	07.04.2025

PROJECT: NBIP00001547

TITLE: 12 kW AI Rectifier
CD200001547

SIZE: A4 | COMMENTS | REV: 01

VARIANT: [No Variations] | SHEET | OF