ATTENTION:
Make sure, that the finished choke does not exceed an overall height of 32.1mm from the base plate bottom to the top coil.
Maximum width: 30mm.

Use temperature-resistant and non-conductive glue to secure the FR4 plate.

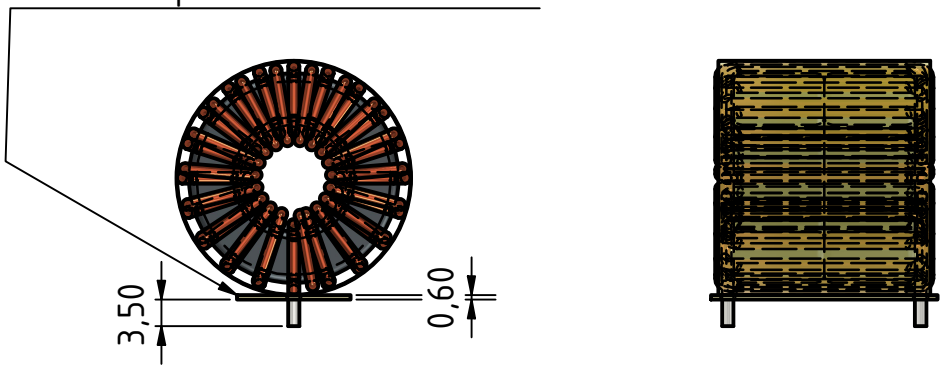

Apply Kapton tape layer as depicted.

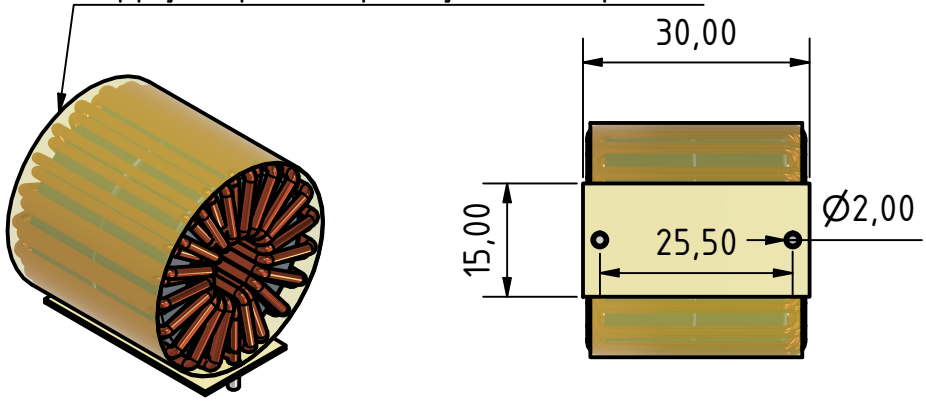

MG100001427 PFC		
Core specification	Wire specification	Base plate specification
ChangSung	1.5mm diameter	FR4
2 x CH270060GT	Isolation coating	30x15x0.6mm

Common mode inductance: 228.15uH± 8%

Winding: Double layer 39 turns

	Datum	Name
Gezeich	05.09.2024	Wernegger
Kontroll		
Norm		

MG200001427

1

A4

Status	Änderungen	Datum	Name

Wiring Instructions					
Wind	Wire	Nr. of turns	Pin output	Nr. of layers	Notes
N1	Copper wire	39	1-2	2	

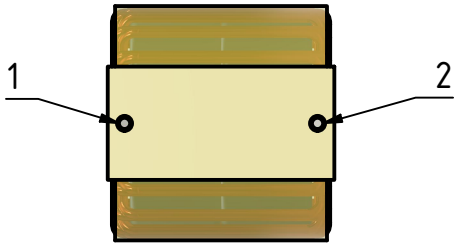

39 turns

Ø1,50 mm

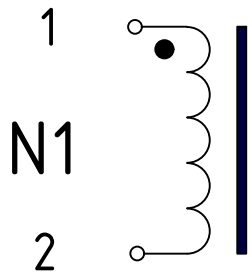

MG100001427 PFC			
No.	Test	Test condition	Limits
1	Inductance	Pin 1-2	209.898-246.402uH
2	Turns ratio		
3	Dielectric strength		

	Datum	Name
Gezeichnet	05.09.2024	Wernegger
Kontrolliert		
Norm		

Electrical Diagram

MG200001427

2

A4

Status	Änderungen	Datum	Name

Winding scheme

Start points
Stop points

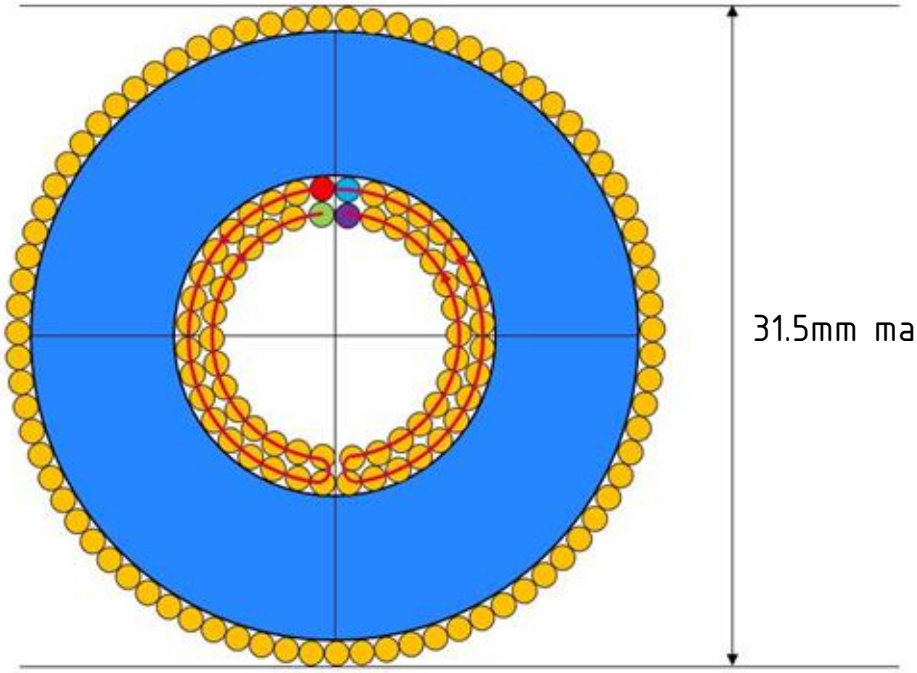

					Datum	Name
				Gezeichnet	05.09.2024	Wernegger
				Kontrolliert		
				Norm		
Status	Änderungen	Datum	Name			

Winding Scheme

MG200001427

3

A4