D_LGPWR_TOLG_V202.SchDoc

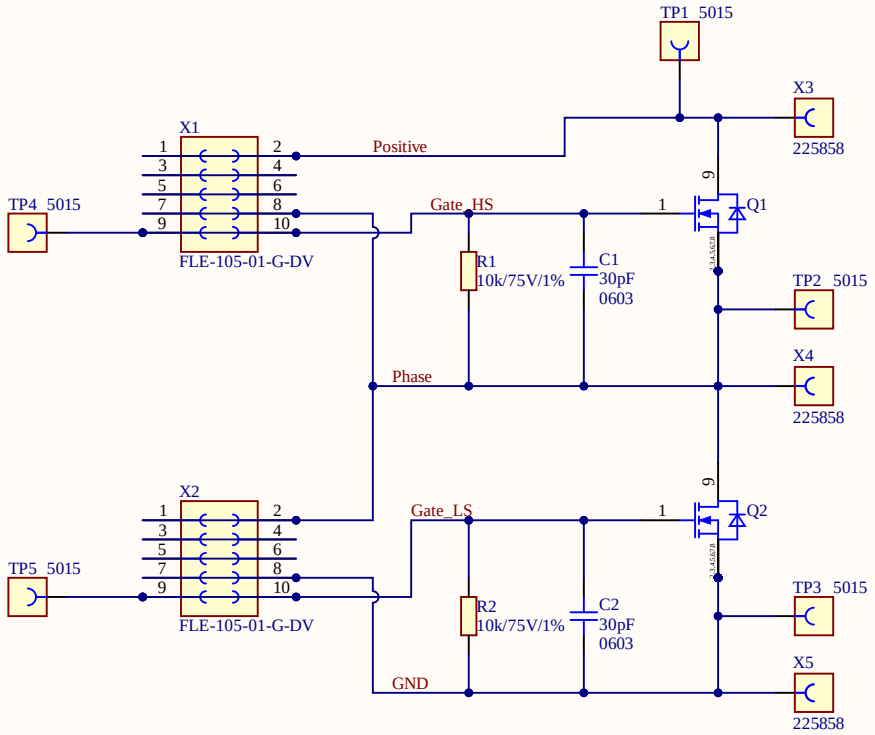

D_LGPWR_TOLG_V202_SPC011_BOMxxx_IPTxxxNxxNx

E1 E2

Fiducial Fiducial

Fiducial Markers

1 1

Infineon Technologies Austria AG
IFAT PSS DCDC AE PM
Siemensstraße 2, 9500 Villach, Austria

Title	Low Voltage Drives Scalable Power Demoboard Platform		
Variant	BOM013_IPTG014N10M5	Approved	Fatih Cetindag
Size: A4	Document Name: D_LGPWR_TOLG_V202.SchDoc	Rev.	V 2.02
Author: Fatih Cetindag			
Date: 6/8/2021 Time: 8:52:38 AM	SVN Revision: Not in version control		

© Infineon Technologies AG 2020. All Rights Reserved.

Sheet 1 of 1