D_LGPWR_D2PAK_V202.SchDoc

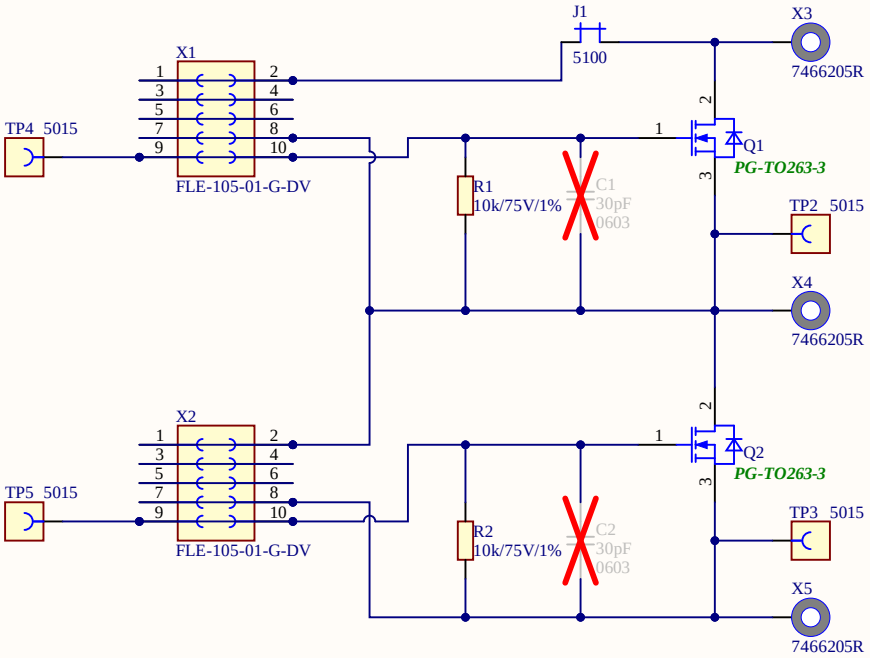

E1 E2

Fiducial Fiducial

Fiducial Markers

LABEL_ISAR1

Project Title

Order Code

Packaging Label

LABEL_Q1

Assembly Full Name

PCB Label

Infineon Technologies Austria AG
IFAT PMM DCDC AE PM
Siemensstraße 2, 9500 Villach, Austria

Title	LVD Scalable Power Demo Board	
Variant	BOM007_IPB107N20N3 G	Approved EK
Size: A4	Document Name D_LGPWR_D2PAK_V202.SchDoc	Rev. V202
Author: UM		
Date: 5/27/2021 Time: 3:18:41 PM		

© Infineon Technologies AG 2015. All Rights Reserved.

Sheet 1 of 1