D_LGPWR_D2PAK7_V202.SchDoc

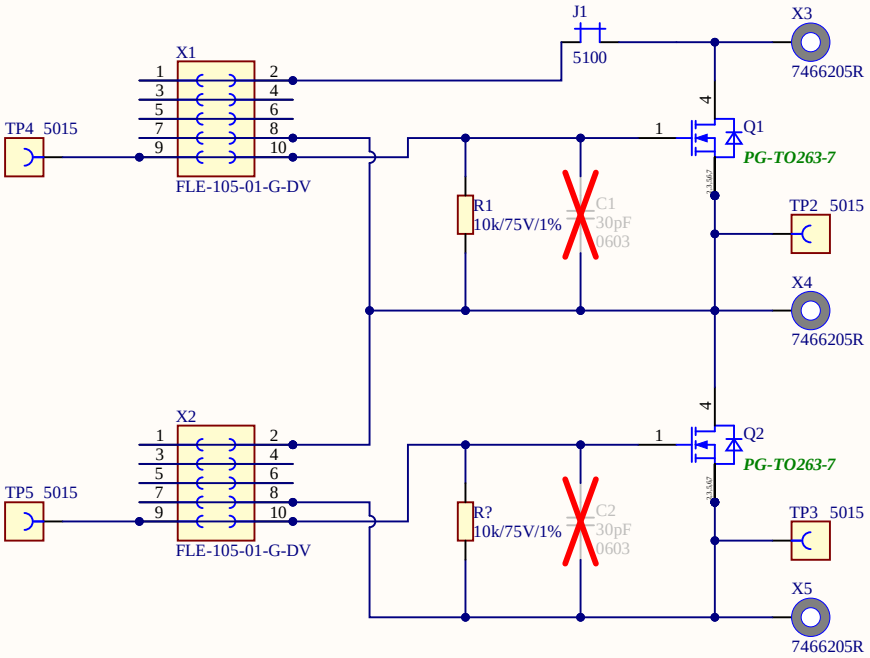

E1 E2

Fiducial Fiducial

Fiducial Markers

LABEL_ISAR1

Project Title

Order Code

Packaging Label

LABEL_Q1

Assembly Full Name

PCB Label

Infineon Technologies Austria AG

IFAT PMM DCDC AE PM

Siemensstraße 2, 9500 Villach, Austria

Title	LVD Scalable Power Demo Board	
Variant	BOM006_IPB044N15N5	Approved EK
Size: A4	Document Name D_LGPWR_D2PAK7_V202.SchDoc	Rev. V202

Author: UM

Date: 5/31/2021 Time: 7:42:12 AM

© Infineon Technologies AG 2015. All Rights Reserved.

Sheet 1 of 1