D_LGMB_DSO14_V201.SchDoc

15V to 5V converter

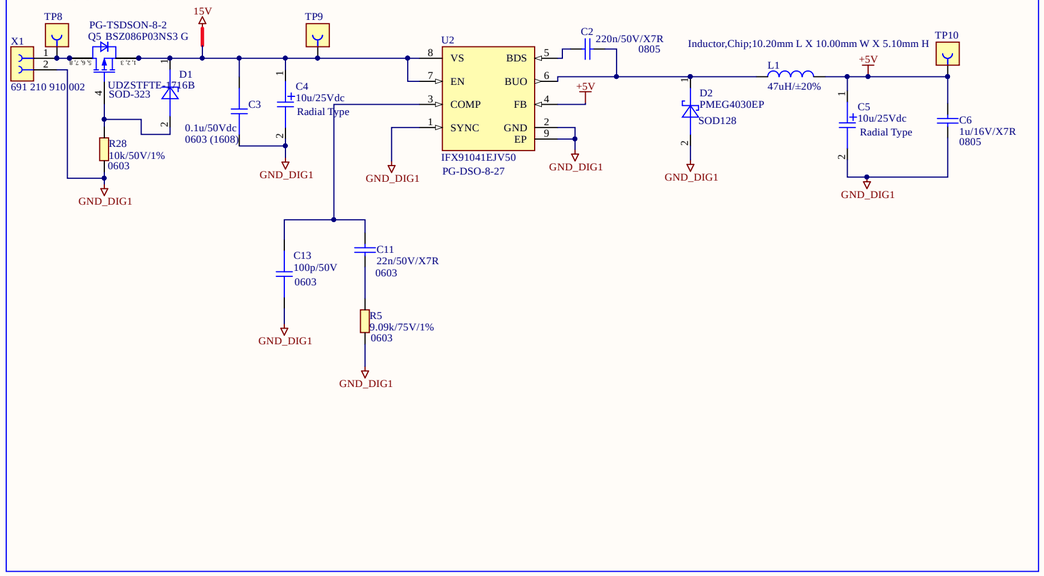

Gate Driver EN-/FLT:

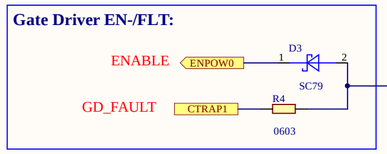

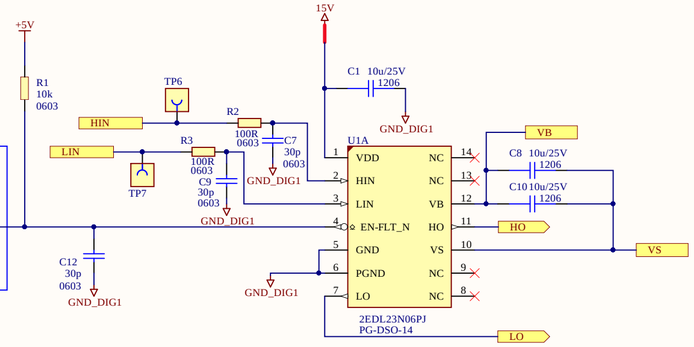

TOTEM POLE HIGH SIDE

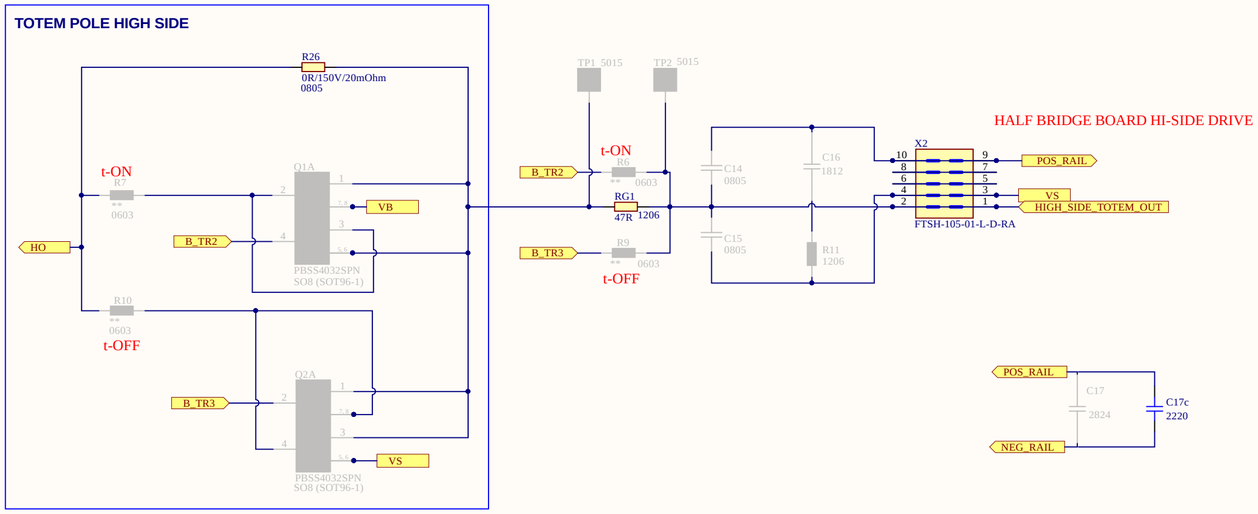

TOTEM POLE LOW SIDE

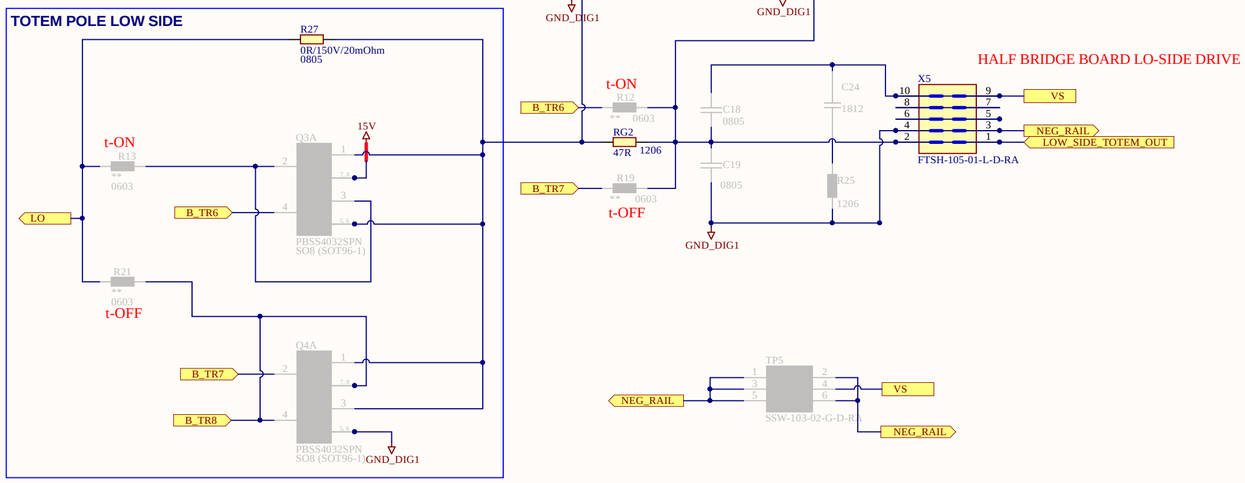

XMC Board Interface

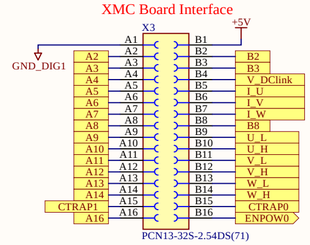

Mother Board BUS

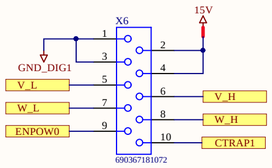

Daughter Board BUS

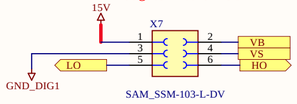

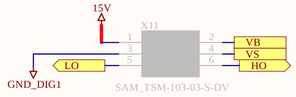

Current Sensing

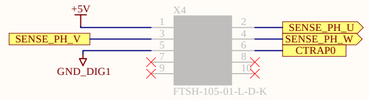

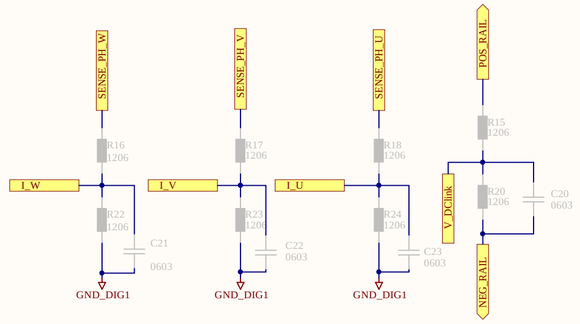

Phase Selection Jumpers

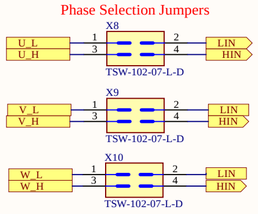

Ribbon Cable

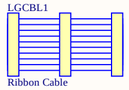

Jumpers



Fiducial Markers



LABEL_ISAR1

Project Title
Order Code

Packaging Label

LABEL_BACK1

Assembly
Full Name

PCB Label

Infineon Technologies Austria AG
IFAT PMM DCDC AE PM
Siemensstraße 2, 9500 Villach, Austria

Title	LVD Scalable Power Demo Board	
Variant	BOM003_2EDL23N06	Approved EK
Size: A2	Document Name: D_LGMB_DSO14_V201.SchDoc	Rev. V201
Author: UM		
Date: 26.06.2019	Time: 17:12:21	

@ Infineon Technologies AG 2018. All Rights Reserved.

Sheet 1 of 1

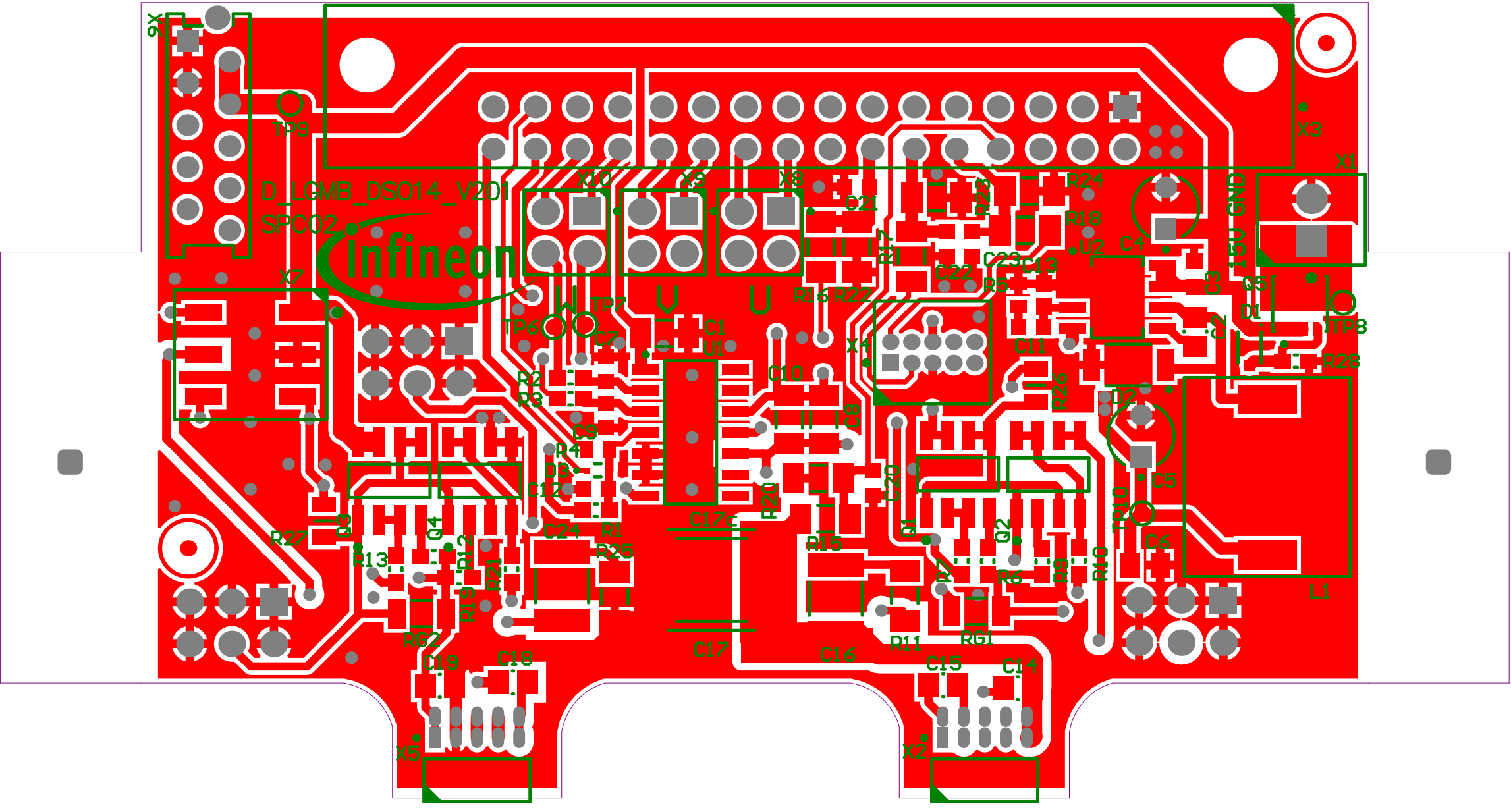
D_LGMB_DSO14_V2.01
SPC02
Infineon
X6
TP9
X10
X9
X8
X3
X1
X7
TP6
TP7
TP8
X4
X5
X2
U1
C1
C2
C3
C4
C5
C6
C7
C8
C9
C10
C11
C12
C13
C14
C15
C16
C17
C18
C19
C21
C22
C23
C24
R1
R2
R3
R4
R5
R6
R7
R8
R9
R10
R11
R13
R14
R15
R16
R18
R20
R21
R22
R25
R27
R28
RG1
RG2
Q1
Q2
Q3
Q4
Q5
D1
D2
D3
L1
L2
U2