D_LGDB_V200.SchDoc

Daughter Board BUS

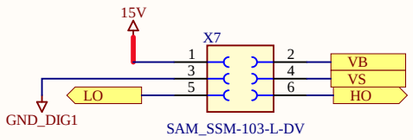

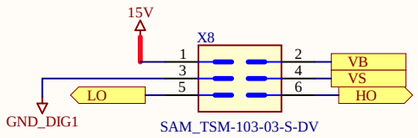



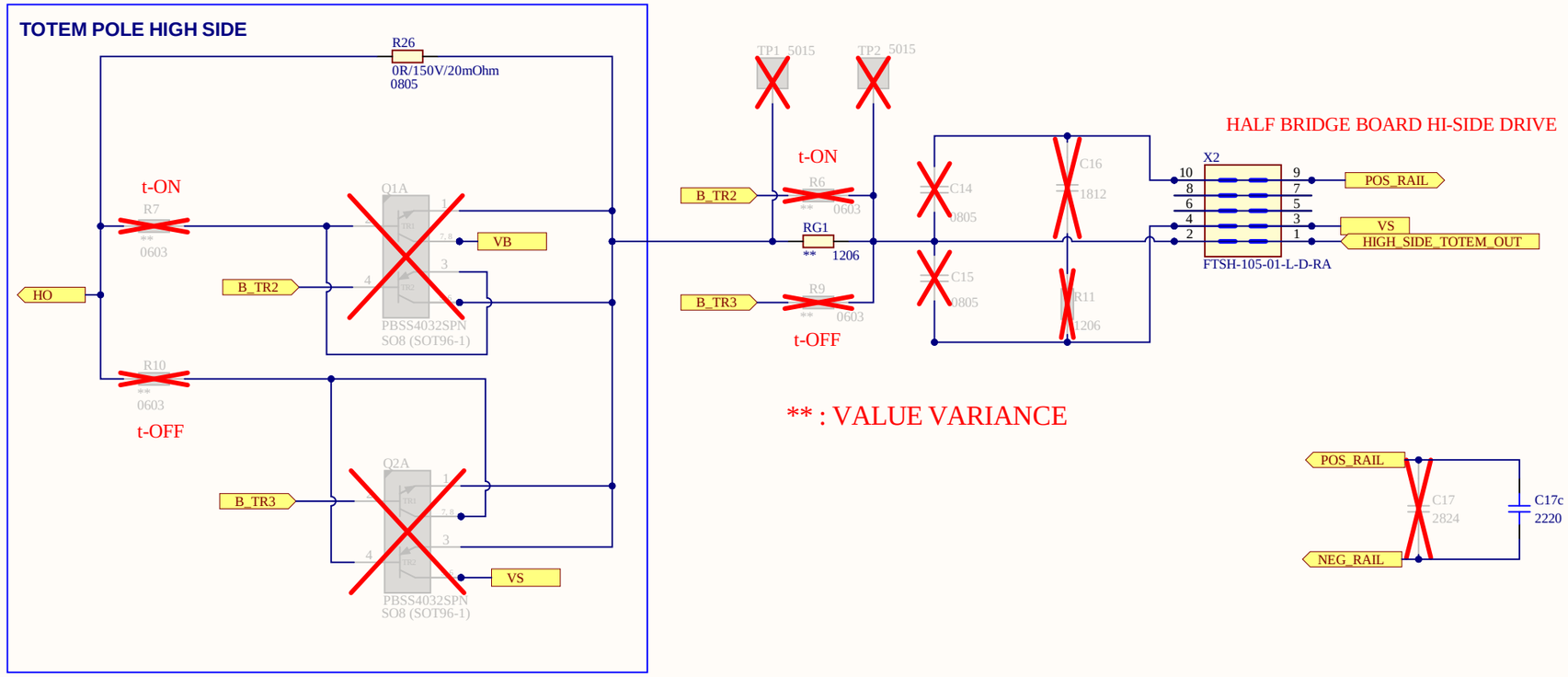

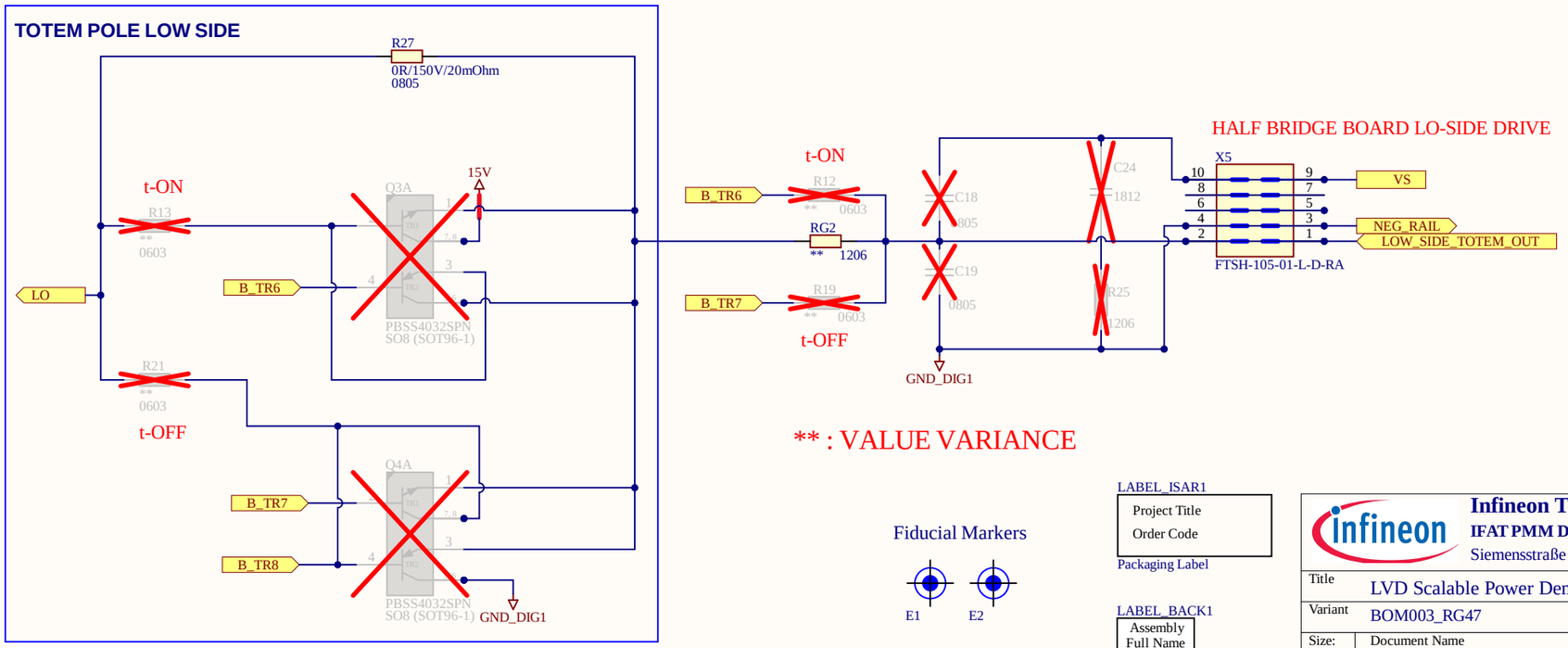

Fiducial Markers

LABEL_ISAR1

Project Title
Order Code

Packaging Label

LABEL_BACK1

Assembly
Full Name

PCB Label

Infineon Technologies Austria AG
IFAT PMM DCDC AE PM
Siemensstraße 2, 9500 Villach, Austria

Title	LVD Scalable Power Demo Board	
Variant	BOM003_RG47	Approved EK
Size: A3	Document Name D_LGDB_V200.SchDoc	Rev. V200
Author: UM		
Date: 5/31/2021 Time: 3:06:31 PM		
@ Infineon Technologies AG 2018. All Rights Reserved.		Sheet 1 of 1