Dimensions

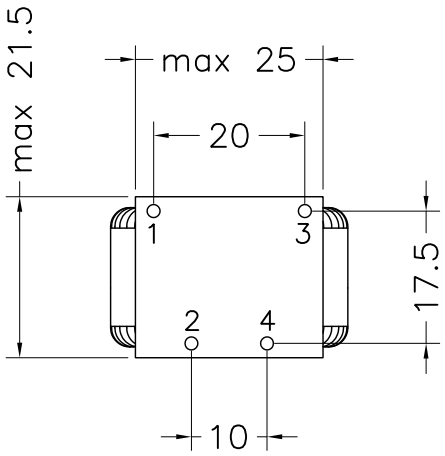

Electrical diagram

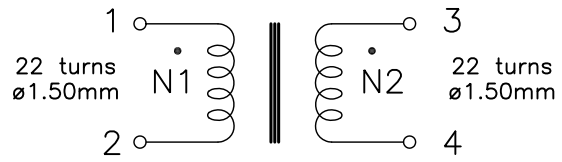

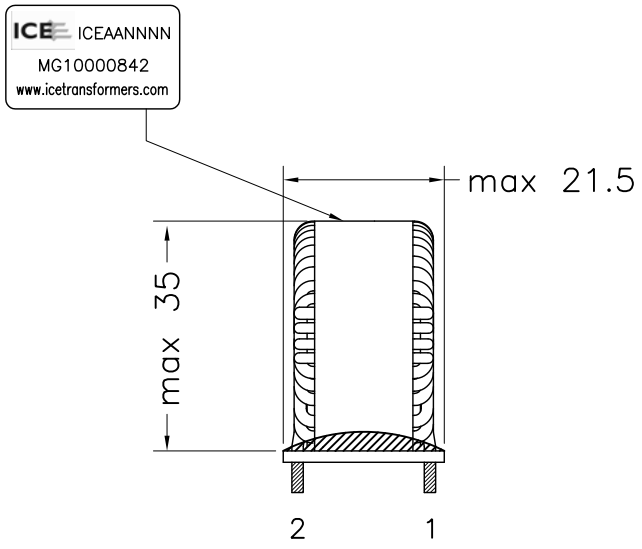

Dimensions in millimeters

2015/863/UE (RoHS–3) compliant

Electrical features

Inductance 1–2=3–4 @ 10kHz 100mV	6.34mH ±35%
Dielectric strength N1/N2	2000 V – 50 Hz
Core – material	Epcos – B64290L647X38
Copper Wire grade 1, thermal class 155°C	E60641 or equivalent

REV	APPR DATE	RIF. MOD.	DESCRIPTION OF MODIFICATION	EMITTED	CHECK AND APPROVAL
01	21.08.18		Release	A. Ridolfi	D. Di Giorgio

DESCRIPTION: **Common mode choke – MG10000842**

Mod. AQ 05.09

DOCUMENT TYPE	CODE	REVISION	RELASE DATE	PAGE
S.T.	8024.3002.047	01	21.08.18	1of1