Index

Page	Schematics Page Name
01	Cover Sheet / Revision History
02	system block
03	GaN power stage incl current sensor, phase 1/3
04	Microcontroller & interface
05	Power supply & protection

REF_MTR_48V30A_GaN_cover.schdoc

Revision History

Rev.	Rel.	Date	Author	Description	Page(s)
1.0	1.0	2020-11-25	Cannone	Initial design	
1.01	1.0	2021-03-03	Wattenberg, Gade	General reveiw, Pinout micro review	
1.0	1.1	2022-01-24	Cannone	Improvements stack up (6 -> 8 layers)	
1.0	2.0	2024-08-16	Cannone	Release of the Ver. 2.0	

REF_MTR_48V30A_GaN

[No Variations]

1.0

Infineon Technologies Austria AG

9500 Villach - Austria

Siemensstrasse 2

2024

Link to Top Level Document

02 Top Level
REF_MTR_48V30A_GaN_system_block.SchDoc

LEGAL DISCLAIMER
THE INFORMATION GIVEN IN THIS DOCUMENT IS GIVEN FOR ILLUSTRATING PURPOSES ONLY. THE RECIPIENT OF THIS DOCUMENT MUST VERIFY ANY FUNCTION DESCRIBED HEREIN IN THE REAL APPLICATION. INFINEON TECHNOLOGIES HEREBY DISCLAIMS ANY AND ALL WARRANTIES AND LIABILITIES OF ANY KIND (INCLUDING WITHOUT LIMITATION WARRANTIES OF NON-INFRINGEMENT OF INTELLECTUAL PROPERTY RIGHTS OF ANY THIRD PARTY) WITH RESPECT TO ANY AND ALL INFORMATION GIVEN IN THIS DOCUMENT.

Application GaN technology
Confidential

Infineon Technologies Austria AG
9500 Villach - Austria
Siemensstrasse 2

Title	REF_MTR_48V30A_GaN		
Variant	[No Variations]	Approved	<Appr.>
Size: A3	Document Name: REF_MTR_48V30A_GaN_cover.schdoc	Rel. 2.0	Rev. 1.0
Author: Marco Cannone			
Date: 19.08.2024 Time: 15:56:18	SVN Revision: 1344		
© Infineon Technologies AG 2021. All Rights Reserved.	Sheet 1 of 5		

REF_MTR_48V30A_GaN_system_block.SchDoc

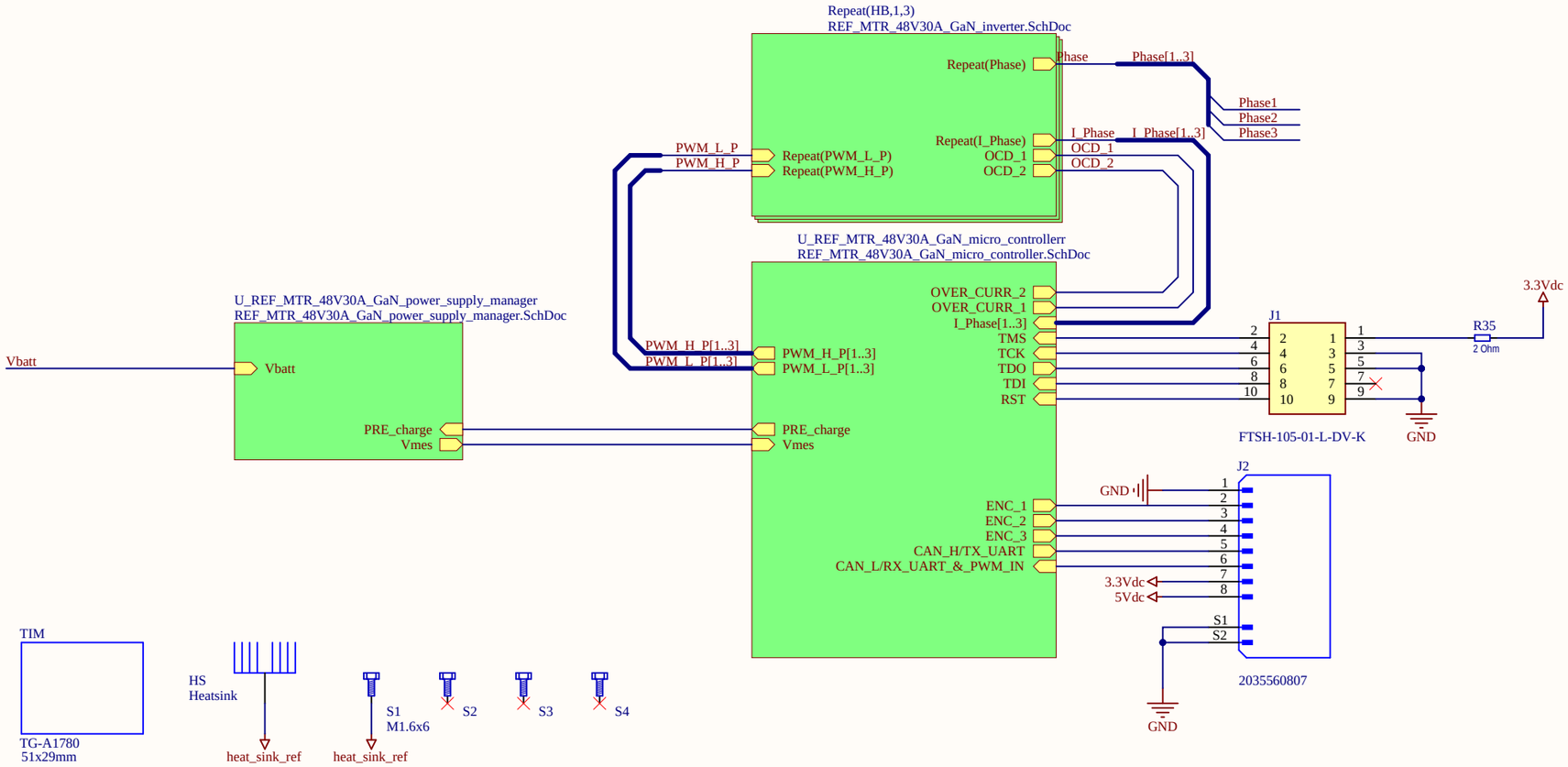

Application GaN technology
Confidential

Infineon Technologies Austria AG **9500 Villach - Austria** Siemensstrasse 2			
Title	REF_MTR_48V30A_GaN		
Variant	[No Variations]	Approved	*
Size: A3	Document Name: REF_MTR_48V30A_GaN_system_block.SchDoc	Rel. 2.0	Rev. 1.0
Author: Marco Cannone			
Date: 19.08.2024 Time: 15:56:18	SVN Revision: 1344		
© Infineon Technologies AG 2021. All Rights Reserved.	Sheet 2 of 5		

REF_MTR_48V30A_GaN_micro_controller.SchDoc

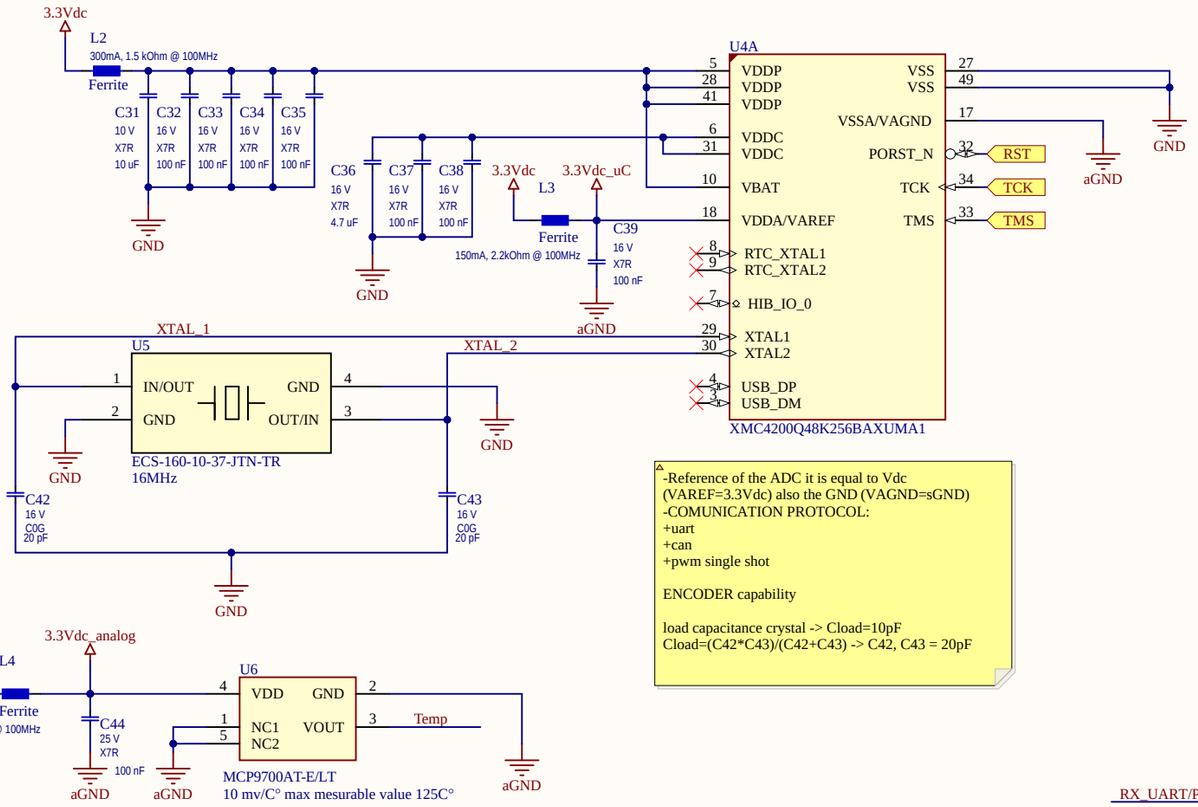

-Reference of the ADC it is equal to Vdc (VAREF=3.3Vdc) also the GND (VAGND=sGND)
-COMUNICATION PROTOCOL:
+uart
+can
+pwm single shot

ENCODER capability

load capacitance crystal -> Cload=10pF
Cload=(C42*C43)/(C42+C43) -> C42, C43 = 20pF

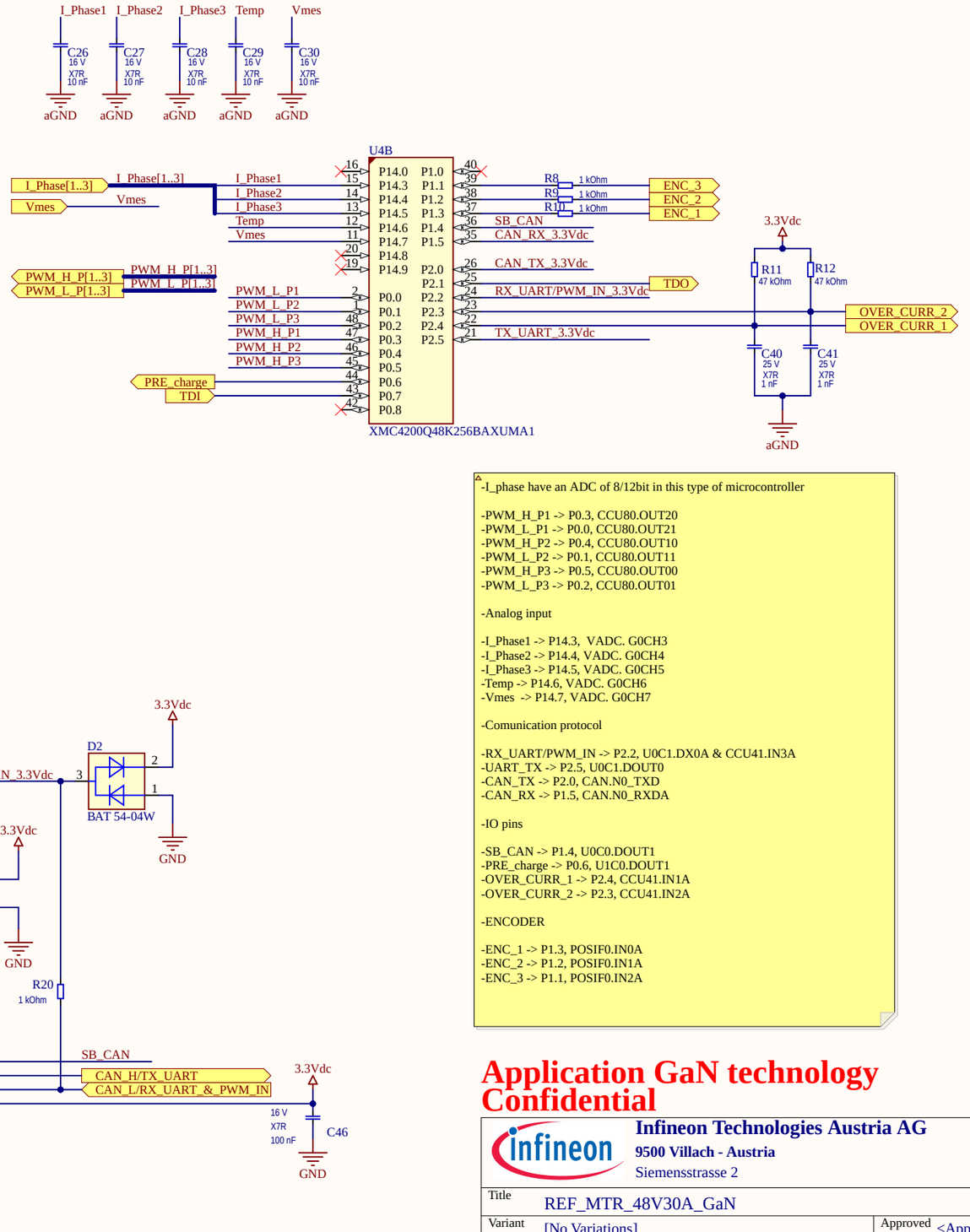

-I_phase have an ADC of 8/12bit in this type of microcontroller

-PWM_H_P1 -> P0.3, CCU80.OUT20
-PWM_L_P1 -> P0.0, CCU80.OUT21
-PWM_H_P2 -> P0.4, CCU80.OUT10
-PWM_L_P2 -> P0.1, CCU80.OUT11
-PWM_H_P3 -> P0.5, CCU80.OUT00
-PWM_L_P3 -> P0.2, CCU80.OUT01

-Analog input

-I_Phase1 -> P14.3, VADC. G0CH3
-I_Phase2 -> P14.4, VADC. G0CH4
-I_Phase3 -> P14.5, VADC. G0CH5
-Temp -> P14.6, VADC. G0CH6
-Vmes -> P14.7, VADC. G0CH7

-Comunication protocol

-RX_UART/PWM_IN -> P2.2, U0C1.DX0A & CCU41.IN3A
-UART_TX -> P2.5, U0C1.DOUT0
-CAN_TX -> P2.0, CAN.N0_TXD
-CAN_RX -> P1.5, CAN.N0_RXDA

-IO pins

-SB_CAN -> P1.4, U0C0.DOUT1
-PRE_charge -> P0.6, U1C0.DOUT1
-OVER_CURR_1 -> P2.4, CCU41.IN1A
-OVER_CURR_2 -> P2.3, CCU41.IN2A

-ENCODER

-ENC_1 -> P1.3, POSIF0.IN0A
-ENC_2 -> P1.2, POSIF0.IN1A
-ENC_3 -> P1.1, POSIF0.IN2A

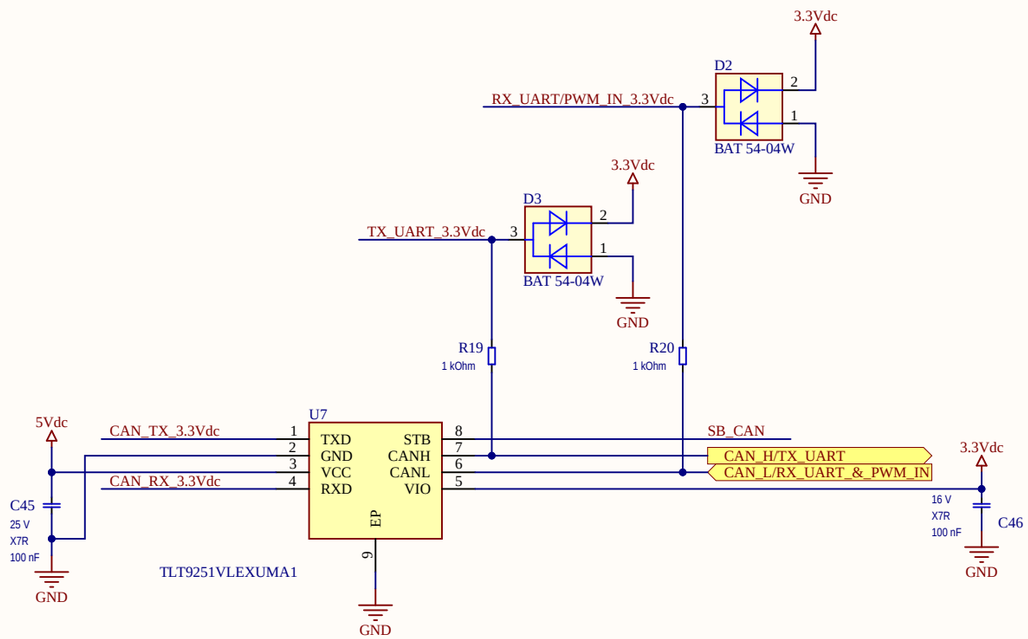

Application GaN technology Confidential

Infineon Technologies Austria AG
9500 Villach - Austria
Siemensstrasse 2

Title	REF_MTR_48V30A_GaN		
Variant	[No Variations]	Approved	<Appr.>
Size: A3	Document Name: REF_MTR_48V30A_GaN_micro_controller.SchDoc	Rel. 2.0	Rev. 1.0

Author: Marco Cannone
Date: 19.08.2024 Time: 15:56:18 SVN Revision: 1344

© Infineon Technologies AG 2021. All Rights Reserved.

Sheet 3 of 5

REF_MTR_48V30A_GaN_power_supply_manager.SchDoc

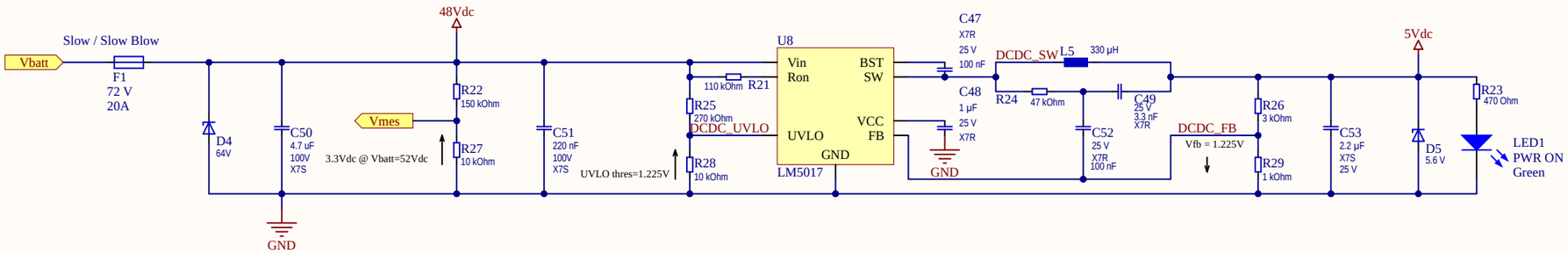

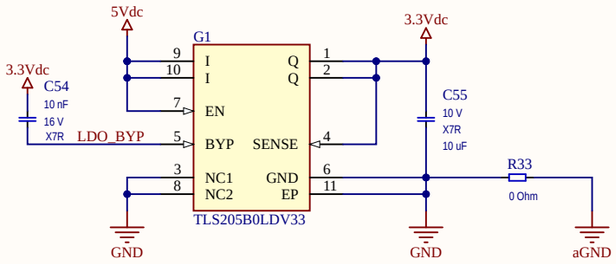

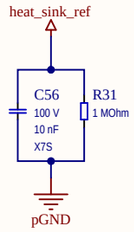

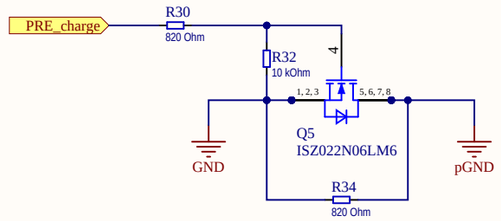

DCDC see datasheet

Vout=1,225V*(R29*R26/R29)=500kHz
fsw=Vout/(K*Ron)=500kHz
L5=((Vin-Vout)/(di*fsw))*(Vout/Vin)=300uH

Inductor

di=30mA
Satutation current-> Isat= 290mA
Max current -> 390mA

TVS
-Reverse stand off -> Vr=64V
-Break down -> Vbd(max)= 78,60V

Lipo cell. max value -> 4.2V
x12 -> 50.4 V
x14 -> 58.8 V

Power management:

->Max current 3,3V LDO
-uC->100mA
-x3 Curr. sen. -> 75mA
-CAN3,3v-> 2mA

->Itot3,3v=177mA

->Max current 5V DCDC (eff.=0.85)
-CAN5v-> 48mA
-x6 gDriver-> 30mA
-Led -> 4mA
-Itot3,3v->177mA

->Itot=259mA (AVG worst)

Application GaN technology
Confidential

Infineon Technologies Austria AG
9500 Villach - Austria
Siemensstrasse 2

Title	REF_MTR_48V30A_GaN		
Variant	[No Variations]	Approved	<Appr.>
Size: A3	Document Name: REF_MTR_48V30A_GaN_power_supply_manager.SchDoc	Rel. 2.0	Rev. 1.0
Author: Marco Cannone			
Date: 19.08.2024 Time: 15:56:19	SVN Revision: 1344		

© Infineon Technologies AG 2021. All Rights Reserved.

REF_MTR_48V30A_GaN_inverter.SchDoc

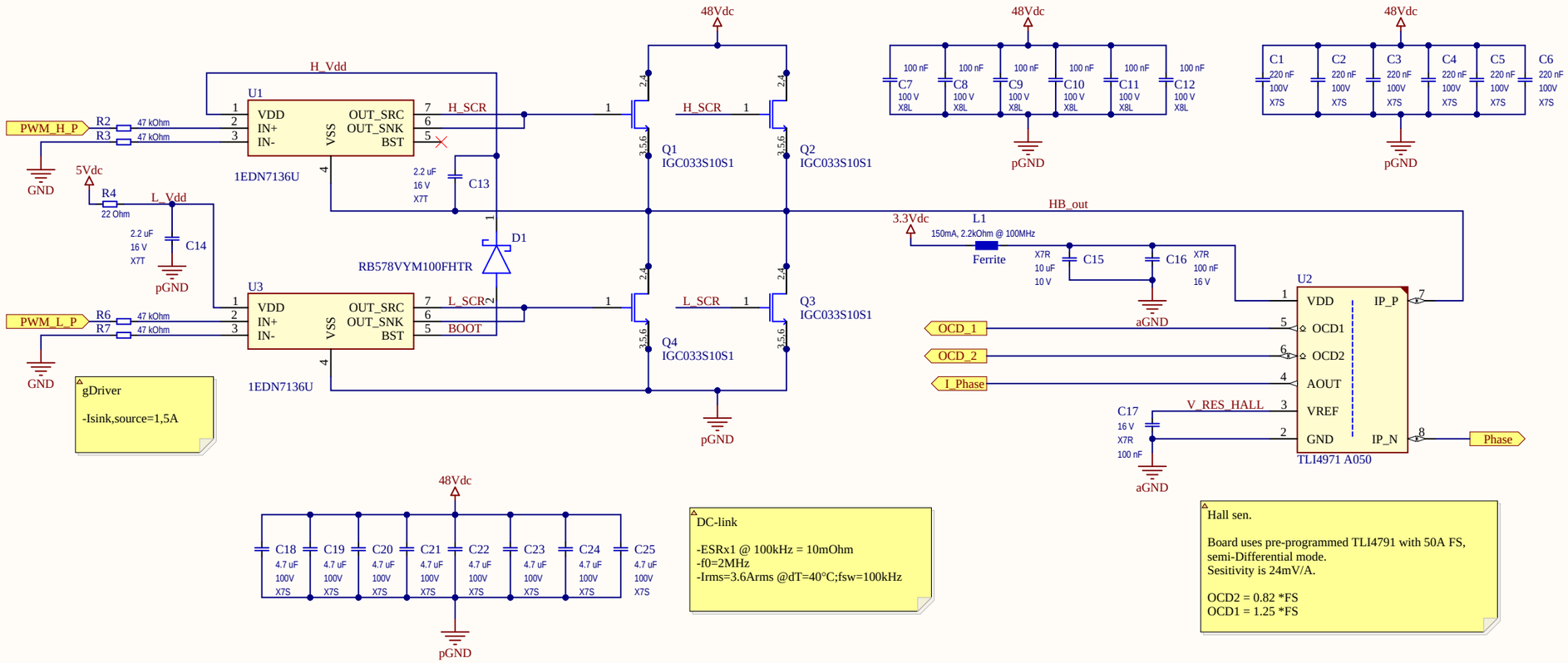

Application GaN technology Confidential

Infineon Technologies Austria AG **9500 Villach - Austria** Siemensstrasse 2			
Title	REF_MTR_48V30A_GaN		
Variant	[No Variations]	Approved	*
Size: A3	Document Name: REF_MTR_48V30A_GaN_inverter.SchDoc	Rel. 2.0	Rev. 1.0
Author: Marco Cannone			
Date: 19.08.2024 Time: 15:56:19	SVN Revision: 1344		
© Infineon Technologies AG 2021. All Rights Reserved.	Sheet 5 of 5		