EVAL-1ED3122MC12H-SiC user guide

Evaluation board description for use with SiC MOSFETs

About this document

Scope and purpose

The gate driver evaluation board EVAL-1ED3122MC12H-SiC with the 1ED3122MC12H gate driver IC demonstrates functionality and key features of the Infineon EiceDRIVER™ X3 Compact gate driver ICs when used to drive CoolSiC™ switches. The purpose is to evaluate both functionality and performance with various silicon carbide MOSFETs in a basic half-bridge configuration. Besides high output current, the gate driver IC offers active Miller clamp, both beneficial features for silicon carbide MOSFETs.

The board contains an isolated power supply for the gate voltages required by the gate driver ICs as well as a shunt-based, overcurrent monitoring circuit.

Visit the product page for more details on the EiceDRIVER™ X3 Compact 1ED3122MC12H or use the weblink at the bottom of the page for a generic portfolio overview.

The user guide provides an overview of the evaluation board and describes:

- the main features
- electrical characteristics
- power-up and use cases
- functional blocks and schematics

Intended audience

- Engineers who want to learn how to use the Infineon EiceDRIVER™ gate driver ICs
- Experienced design engineers designing circuits with Infineon EiceDRIVER™ gate driver ICs and CoolSiC™ MOSFETs
- Design engineers designing power electronic devices like solar inverters and EV charging stations

Evaluation board

This board will be used during the design-in phase, for evaluation and measurement of characteristics, and proof of data sheet specifications.

Note: PCB and auxiliary circuits are NOT optimized for final customer design.

Important notice

“Evaluation Boards and Reference Boards” shall mean products embedded on a printed circuit board (PCB) for demonstration and/or evaluation purposes, which include, without limitation, demonstration, reference and evaluation boards, kits and design (collectively referred to as “Reference Board”).

Environmental conditions have been considered in the design of the Evaluation Boards and Reference Boards provided by Infineon Technologies. The design of the Evaluation Boards and Reference Boards has been tested by Infineon Technologies only as described in this document. The design is not qualified in terms of safety requirements, manufacturing and operation over the entire operating temperature range or lifetime.

The Evaluation Boards and Reference Boards provided by Infineon Technologies are subject to functional testing only under typical load conditions. Evaluation Boards and Reference Boards are not subject to the same procedures as regular products regarding returned material analysis (RMA), process change notification (PCN) and product discontinuation (PD).

Evaluation Boards and Reference Boards are not commercialized products, and are solely intended for evaluation and testing purposes. In particular, they shall not be used for reliability testing or production. The Evaluation Boards and Reference Boards may therefore not comply with CE or similar standards (including but not limited to the EMC Directive 2004/EC/108 and the EMC Act) and may not fulfill other requirements of the country in which they are operated by the customer. The customer shall ensure that all Evaluation Boards and Reference Boards will be handled in a way which is compliant with the relevant requirements and standards of the country in which they are operated.

The Evaluation Boards and Reference Boards as well as the information provided in this document are addressed only to qualified and skilled technical staff, for laboratory usage, and shall be used and managed according to the terms and conditions set forth in this document and in other related documentation supplied with the respective Evaluation Board or Reference Board.

It is the responsibility of the customer’s technical departments to evaluate the suitability of the Evaluation Boards and Reference Boards for the intended application, and to evaluate the completeness and correctness of the information provided in this document with respect to such application.

The customer is obliged to ensure that the use of the Evaluation Boards and Reference Boards does not cause any harm to persons or third party property.
The Evaluation Boards and Reference Boards and any information in this document is provided "as is" and Infineon Technologies disclaims any warranties, express or implied, including but not limited to warranties of non-infringement of third party rights and implied warranties of fitness for any purpose, or for merchantability.

Infineon Technologies shall not be responsible for any damages resulting from the use of the Evaluation Boards and Reference Boards and/or from any information provided in this document. The customer is obliged to defend, indemnify and hold Infineon Technologies harmless from and against any claims or damages arising out of or resulting from any use thereof.

Infineon Technologies reserves the right to modify this document and/or any information provided herein at any time without further notice.

Safety precautions

Note: Please note the following warnings regarding the hazards associated with development systems.

Table 1 Safety precautions

	**Warning:** *The DC link potential of this board is up to 1000 VDC. When measuring voltage waveforms by oscilloscope, high voltage differential probes must be used. Failure to do so may result in personal injury or death.*
	**Warning***: The evaluation or reference board contains DC bus capacitors which take time to discharge after removal of the main supply. Before working on the drive system, wait five minutes for capacitors to discharge to safe voltage levels. Failure to do so may result in personal injury or death. Darkened display LEDs are not an indication that capacitors have discharged to safe voltage levels.*
	**Warning:** *Remove or disconnect power from the drive before you disconnect or reconnect wires, or perform maintenance work. Wait five minutes after removing power to discharge the bus capacitors. Do not attempt to service the drive until the bus capacitors have discharged to zero. Failure to do so may result in personal injury or death.*
	**Caution:** *Only personnel familiar with the drive, power electronics and associated machinery should plan, install, commission and subsequently service the system. Failure to comply may result in personal injury and/or equipment damage.*
	**Caution:** *The evaluation or reference board contains parts and assemblies sensitive to electrostatic discharge (ESD). Electrostatic control precautions are required when installing, testing, servicing or repairing the assembly. Component damage may result if ESD control procedures are not followed. If you are not familiar with electrostatic control procedures, refer to the applicable ESD protection handbooks and guidelines.*

Table of contents

About this document **1**
Important notice **2**
Safety precautions **3**
Table of contents **4**
1 The board at a glance **5**
1.1 Delivery content 5
1.2 Main features 5
1.3 Board parameters and technical data 5
2 System and functional description **7**
2.1 Commissioning 7
2.2 Overcurrent protection 7
3 System design **8**
3.1 Schematics 8
3.2 PCB layout 14
3.3 Bill of material 15
3.4 Connectors and pin assignment 17
4 References and appendices **18**
4.1 Abbreviations and definitions 18
Revision history **19**

1 The board at a glance

This user guide (UG-2021-21) describes the evaluation board EVAL-1ED3122MC12H-SiC that is intended for the product feature evaluation of the Infineon EiceDRIVER™ X3 Compact 1ED3122MU12H or 1ED3122MC12H in an application circuit. The key elements of the board and the product are listed here:

- Evaluation board in half-bridge configuration with two gate driver ICs optimized to drive silicon carbide power switches
- Additional gate driver IC for isolated overcurrent feedback signal from high voltage side to logic control side
- Fast operational amplifier used as comparator for overcurrent detection
- Integrated isolated gate driver power supply to provide independent positive and negative supply voltages for both low-side and high-side gate driver IC

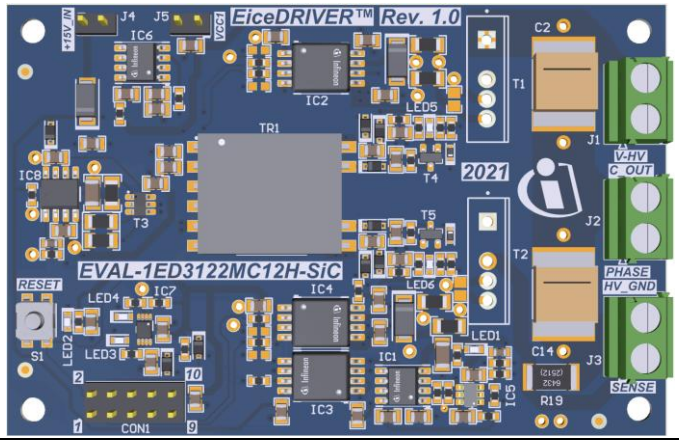

Figure 1 EVAL-1ED3122MC12H-SiC top view

1.1 Delivery content

The board has a size of 85 x 56 x 20 mm^3 without any power switches assembled. 2 pieces of 1200 V CoolSiC™ MOSFET IMZ120R045M1 and 2 pieces of 650 V CoolSiC™ MOSFET IMZA65R048M1H come in separate ESD bags with the evaluation board.

1.2 Main features

This board is best suited for so-called double-pulse testing. However, it requires additional considerations on thermal and power load for continuous operation. An additional high voltage DC blocking capacitor at the high voltage supply is recommended.

The low-voltage interface can be controlled by a pulse generator, a microcontroller, or other digital circuits.

For safe operation, a fast overcurrent detection and protection circuit is implemented with a galvanically isolated feedback path to the low-voltage input side. The input side flip-flop latches the overcurrent event information. This circuit will report the fault and trigger the turn-off of both gate driver ICs. The S1 button, also labeled with RESET, clears the flip-flop to enable the gate driver ICs again.

1.3 Board parameters and technical data

The selected components on this evaluation board as well as the gate driver ICs have maximum ratings and operating conditions to avoid damaging the individual parts and the evaluation board overall.

Table 2 Absolute maximum ratings

Pin/parameter name	Min.	Max.	Unit	Note
+15V_IN	-0.2	20	V	input, support supply voltage
VCC1	-0.2	5.5	V	gate driver IC supply voltage
FAULT	-0.2	VCC1 + 0.2	V	output, digital signal
RST	-0.2	VCC1 + 0.2	V	input, digital signal
IN_HS	-0.2	VCC1 + 0.2	V	input, digital signal
IN_LS	-0.2	VCC1 + 0.2	V	input, digital signal
V-HV	-0.2	800	V	input, high-voltage supply, for voltages exceeding 42 V, special high-voltage lab environment is strongly recommended
Phase peak current	–	40	A	phase peak current for double pulse tests
t_{pulse}	–	100	µs	maximum ON pulse length for double-pulse tests
f_{sw}	–	100	kHz	maximum switching frequency for continuous operation, careful consideration of power dissipation required

Table 3 Operating conditions and supply voltages

Pin name	Min.	Typ.	Max.	Unit	Note
+15V_IN	15.5	16	16.5	V	input, support supply voltage
VCC1	3.2	5.0	5.3	V	gate driver IC supply voltage, internally provided
FAULT	-0.1	5.0	VCC1+0.1	V	output, digital signal
RST	-0.1	5.0	VCC1+0.1	V	input, digital signal
IN_HS	-0.1	5.0	VCC1+0.1	V	input, digital signal
IN_LS	-0.1	5.0	VCC1+0.1	V	input, digital signal
V-HV	25	–	600	V	input, high-voltage supply, for voltages exceeding 42 V, special high-voltage lab environment is strongly recommended

2 System and functional description

2.1 Commissioning

Follow the steps below to set up, power up and perform first evaluations with the board.

Prerequisites

- Assemble fitting power switches at locations T1 and T2, e.g. IMZ120R045M1 or IMZA65R048M1H
- Assemble an external high-voltage DC capacitor (> 100 µF) between J1-1/2 (V-HV) and J3-2 (HV_GND)
- Have a low-voltage power supply ready for input support, logic supply, and isolated power supply (+15V_IN)
- Have a high-voltage power supply ready for HV-DC between J1-1/2 (V-HV) and J3-2 (HV_GND)
- Have an inductive load for double-pulse tests ready
- Have a dual-channel PWM generator ready for half-bridge PWM input

To adapt the circuit to the application requirements, resistor or capacitor values can be changed to optimize the performance.

Power-up sequence

1. Supply +15V_IN at connector J4.1 with +15 V and connect supply GND to connector J4.2
2. The green LED1, LED2, LED5, and LED6 will turn on to indicate available supply voltages
3. The red LED4 will turn on to indicate a power up fault condition
4. Push S1 to reset the error flip-flop
5. The red LED4 will turn off and green LED3 will turn on
6. Connect the digital PWM generator to the digital interface connectors CON1.6 for high-side and CON1.8 for low-side PWM input. The opposite pins CON1.5 and CON1.7 are available as GND reference for the input signal
7. Connect the high-voltage supply to connector J1.1 or J1.2 and HV_GND to J3.2.
8. Connect one end of the inductive load to J2.1 and the other end according to the double-pulse requirements to either J1.1 or J3.2 (low-side or high-side testing)
9. The board is now ready for double-pulse evaluation

2.2 Overcurrent protection

An overcurrent protection is implemented to protect the board and components against high current. The current is determined by measuring the voltage across the shunt resistor R19. This is available at the two test points TP12 and TP14.

The detection circuit measures the voltage across R19, sends the signal through a low pass filter R18 and C21 and compares it to a reference voltage with the comparator IC5. The reference voltage is defined by the voltage divider R12 and R20. The trip point is at approximately 32 A, and can be adapted to application requirements by changing R19 and/or adapting the reference voltage divider R12 and R20.

The output signal is transferred with IC3 to the low voltage domain to trigger the flip-flop and store the over-current event. Once the flip-flop is triggered, it turns off both gate driver ICs by the /ENABLE signal. In addition, it reports the over-current event to the digital interface connector as /FAULT signal and turns the LED4 on.

To return to normal operation, S1 needs to be pushed to reset the flip-flop. As feedback, LED4 turns off and LED3 turns back on again.

3 System design

3.1 Schematics

The schematics of the evaluation board are separated into the following parts:

- Gate driver ICs with surrounding circuit
- Overcurrent detection
- Overcurrent status indication circuit
- Connectors and logic supply
- Low-voltage power supply circuit
- Isolated power supply circuit for gate voltages

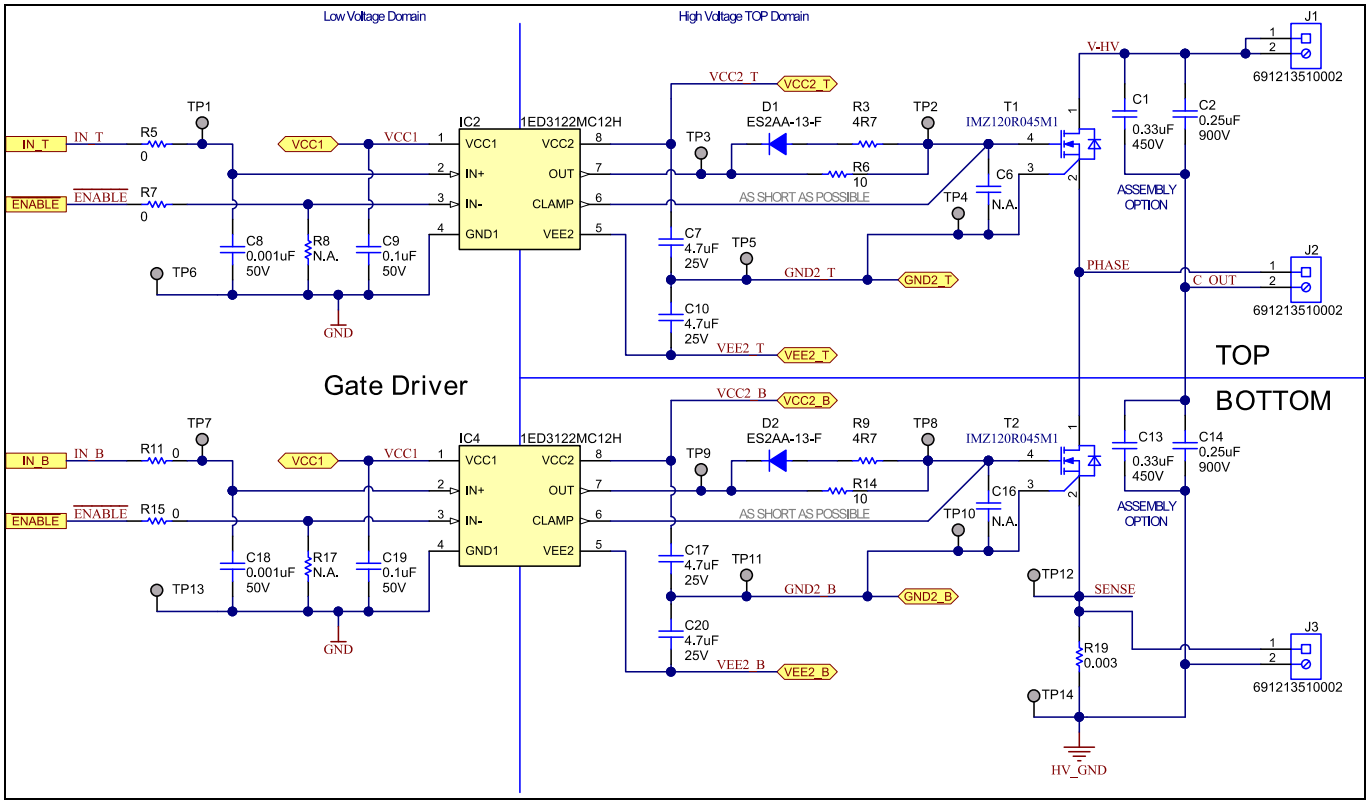

Figure 2 Schematic of gate driver ICs and surrounding circuits

Gate driver IC inputs with optional input filter. Gate driver IC output with active Miller clamp for a 4-pin SiC MOSFET.

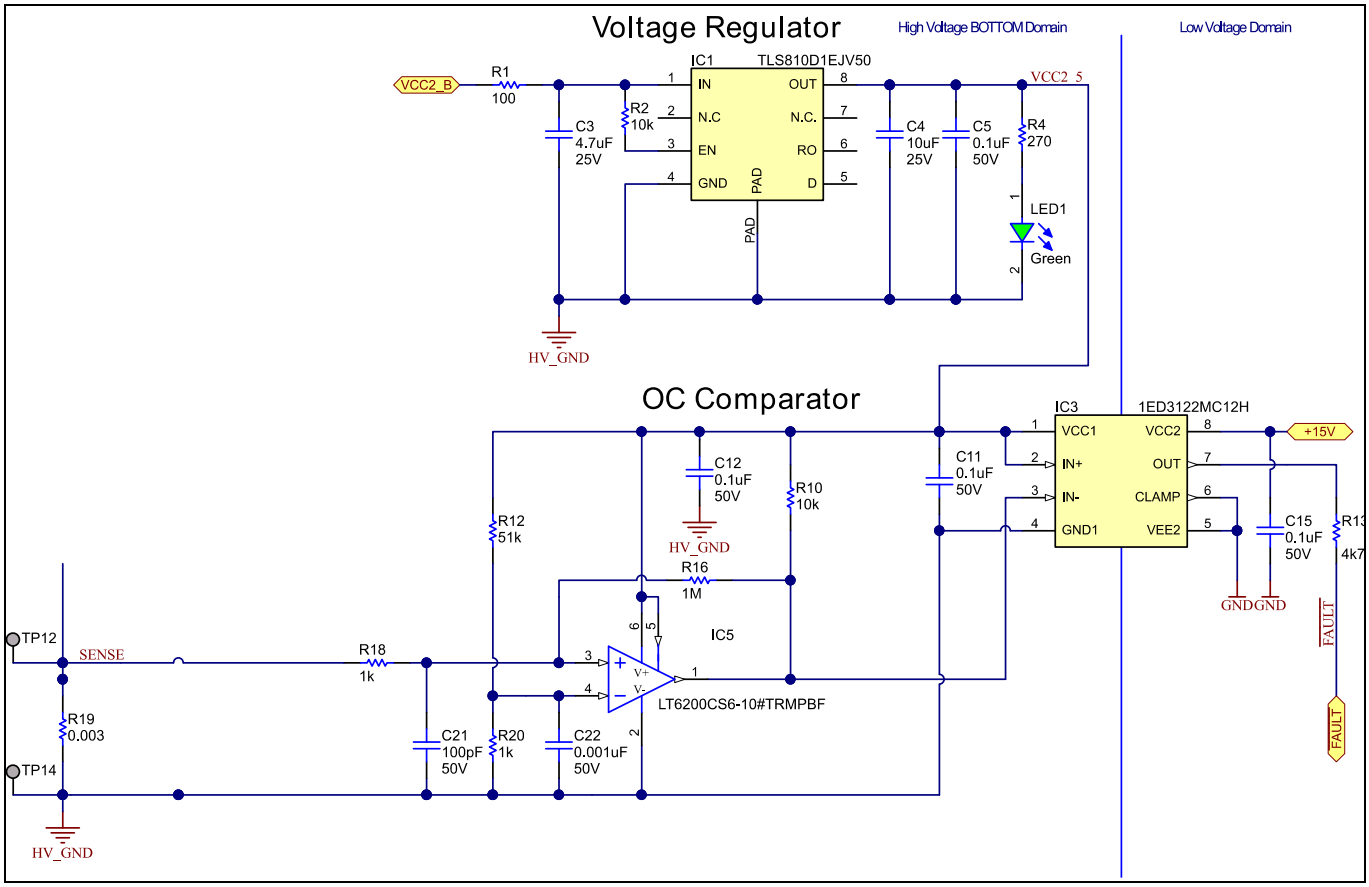

Figure 3 Schematic of overcurrent detection circuit

Overcurrent comparator with additional gate driver IC for isolated signal transmission and supporting voltage regulator.

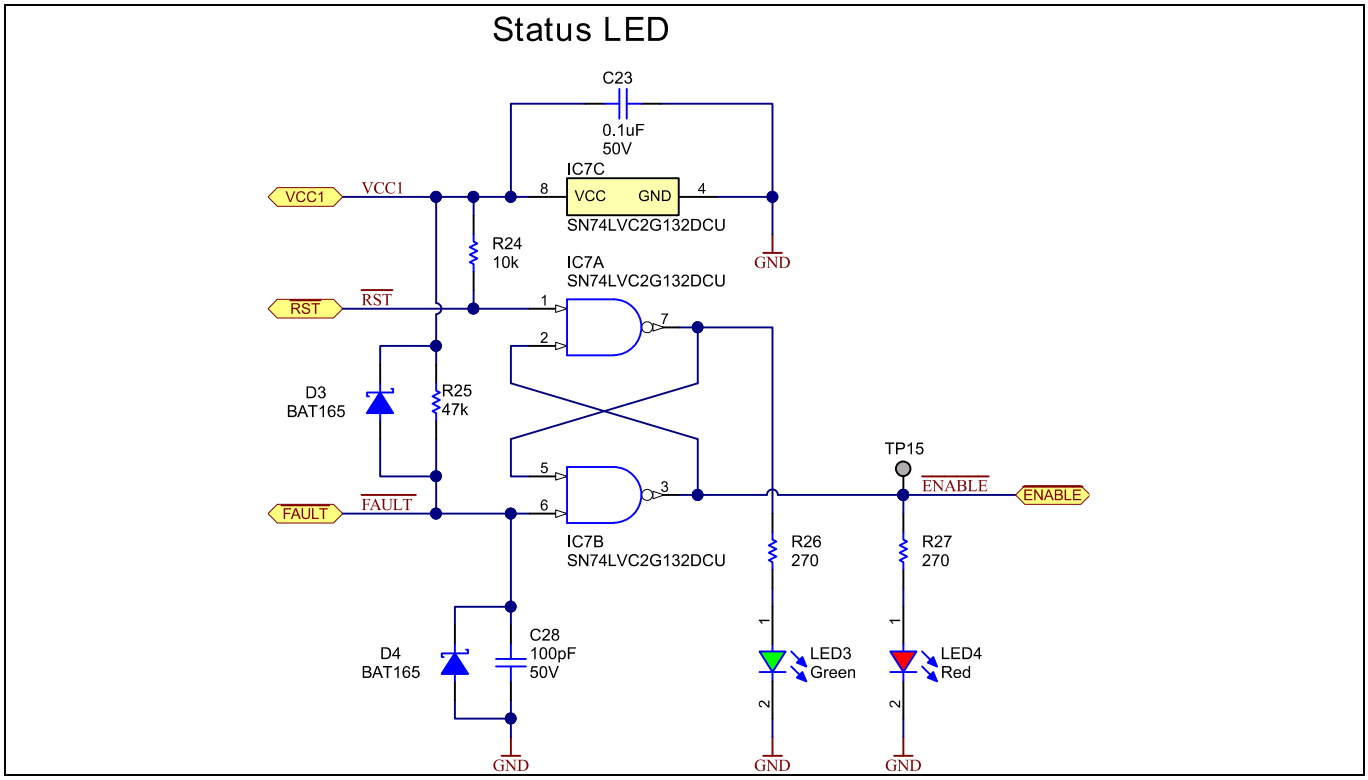

Figure 4 Schematic of overcurrent status indication circuit

Fault signal and reset input of flip-flop including status LEDs.

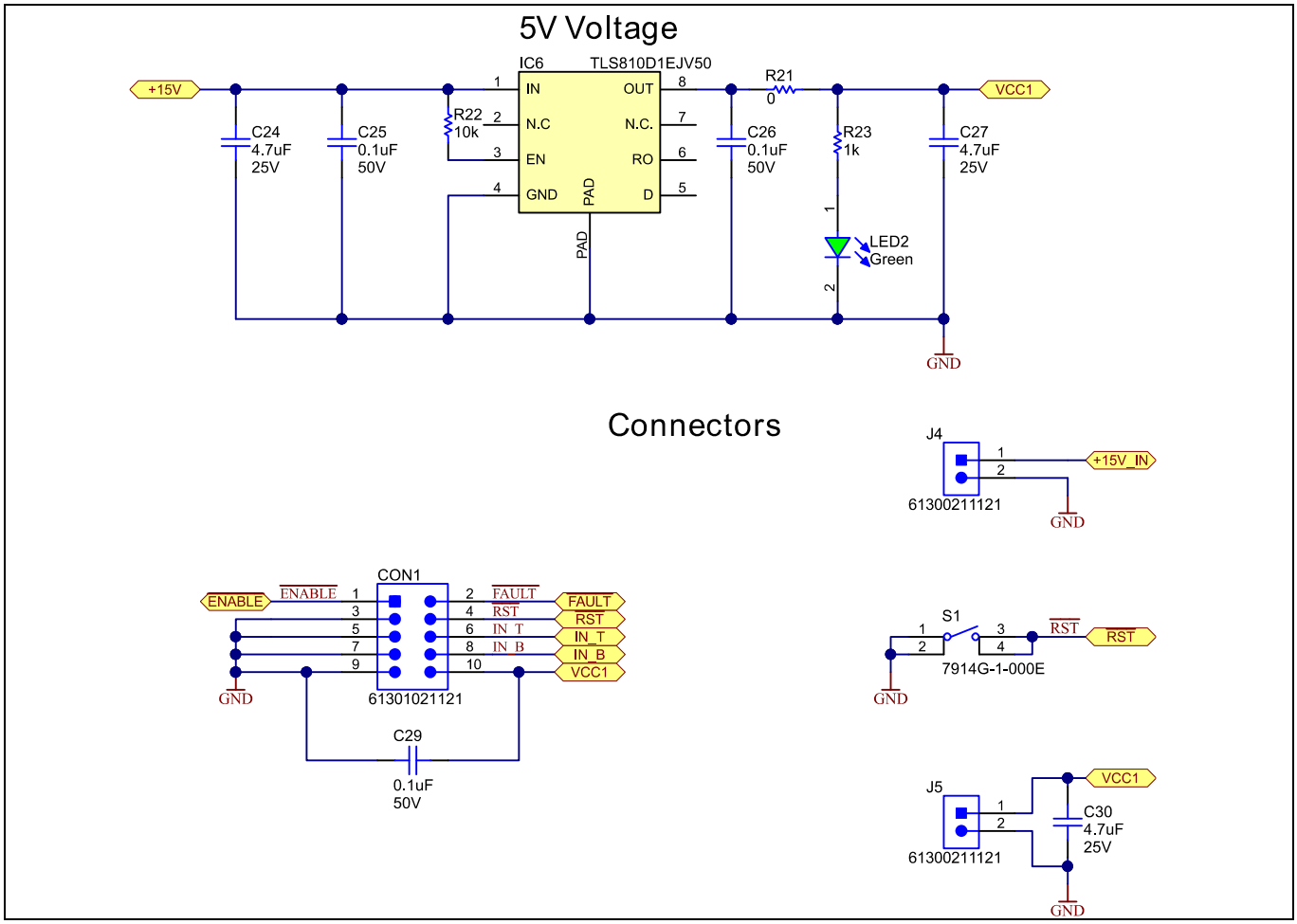

Figure 5 Schematic of connectors and logic supply

Interface connectors, reset button and voltage regulator for logic input supply.

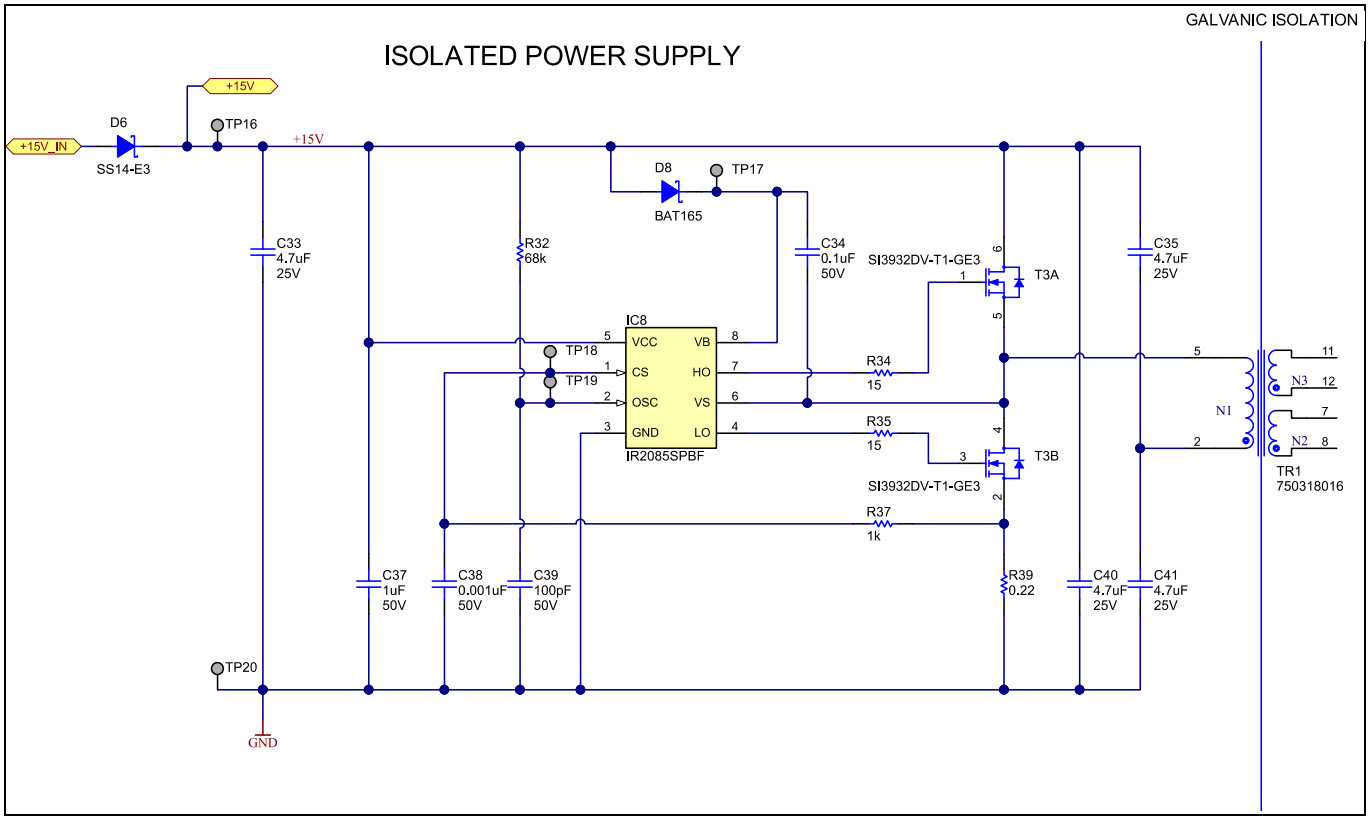

Figure 6 Schematic of low-voltage power supply circuit

Input section of isolated power supply using a self-resonating IR2085 gate driver IC to operate the Würth gate driver transformer.

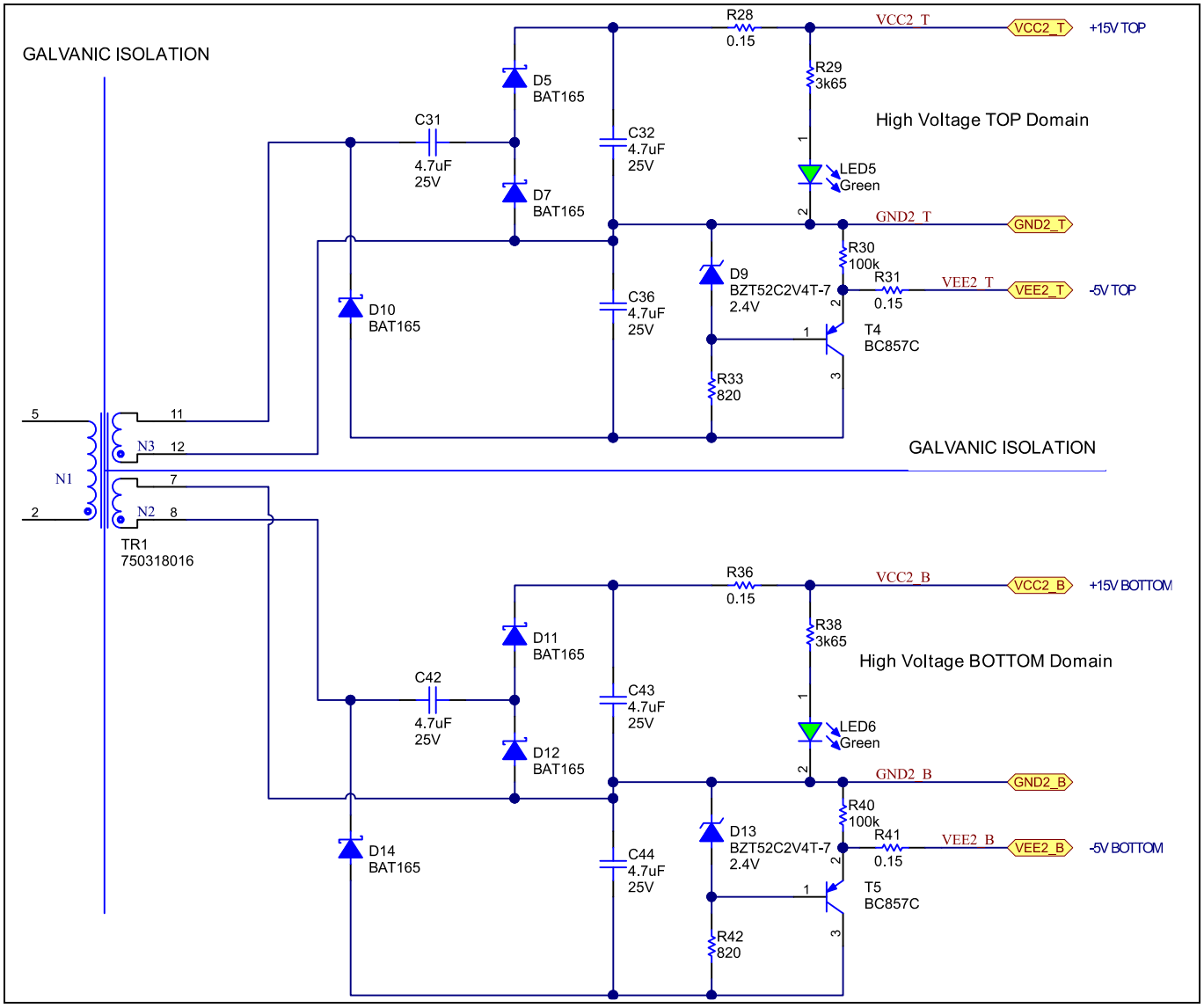

Figure 7 Schematic of isolated power supply circuit for gate driver voltages

Output section of isolated power supply providing low-side and high-side supply for the gate driver ICs. The circuit contains a simple linear voltage regulator for the negative supply voltage.

3.2 PCB layout

The layout from this basic schematic is intended as a starting point for developing more complex application circuits. The evaluation board has a two-layer PCB with top and bottom layer. All components are assembled at the top layer.

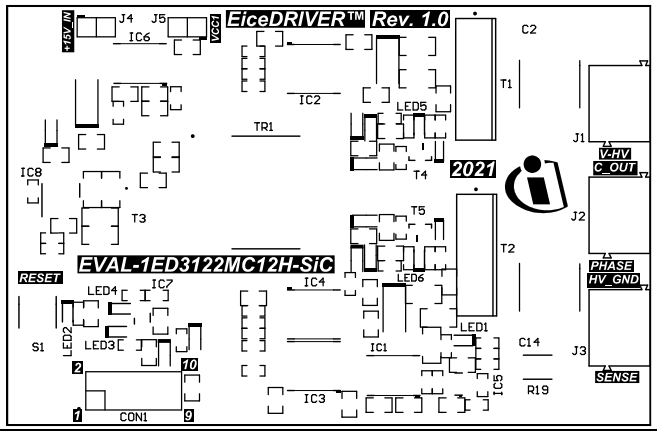

Figure 8 Assembly drawing top-side PCB

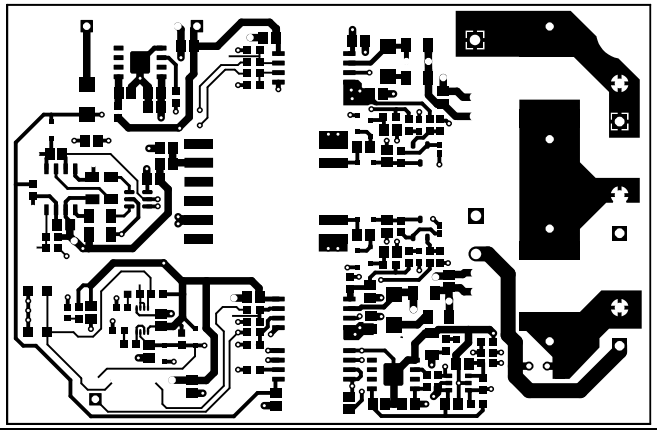

Figure 9 PCB layer top

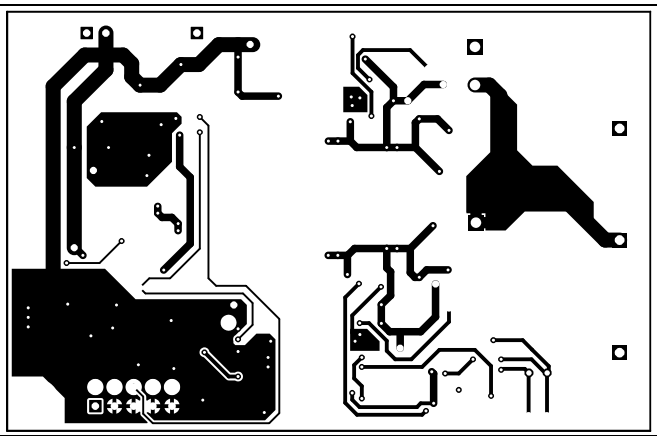

Figure 10 PCB layer bottom

3.3 Bill of material

The BOM lists all components used for the PCB.

Table 4 BOM

Designator	Quantity	Description	Manufacturer	Part number
C2, C14	2	CAP, CERM, 0.25uF, 900V, ±20%, CeraLink	TDK	B58031I9254M062
C3, C7, C10, C17, C20, C24, C27, C30, C31, C32, C33, C35, C36, C40, C41, C42, C43, C44	18	CAP, CERM, 4.7µF, 25V, ±10%, X7R, 0805	MuRata	GRM21BR71E475KA73L
C4	1	CAP, CERM, 10µF, 25V, ±10%, X7R, 1206	Wurth Elektronik	885012208069
C5, C9, C11, C12, C15, C19, C23, C25, C26, C29, C34	11	CAP, CERM, 0.1µF, 50V, ±10%, X7R, 0805	Wurth Elektronik	885012207098
C21, C28, C39	3	CAP, CERM, 100pF, 50V, ±5%, NP0, 0805	Wurth Elektronik	885012007057
C22, C38	2	CAP, CERM, 0.001µF, 50V, ±10%, X7R, 0603	Wurth Elektronik	885012206083
C37	1	CAP, CERM, 1µF, 50V, ±10%, X7R, 1206	Wurth Elektronik	885012208093
CON1	1	Header, 100mil, 5x2, Gold, Vertical, THT	Wurth Elektronik	61301021121
D1, D2	2	Diode, Superfast Rectifier, 50V, 2A, DO214AC (SMA)	Diodes Incorporated	ES2AA-13-F
D3, D4, D5, D7, D8, D10, D11, D12, D14	9	Diode, Schottky, 40V, 0.75A, SOD-323	Infineon Technologies	BAT165
D6	1	Diode, Schottky, 40V, 1A, DO214AC (SMA)	Vishay Semiconductor	SS14-E3
D9, D13	2	Diode, Zener, 2.4V, 0.3W, SOD-523	Diodes Inc.	BZT52C2V4T-7
IC1, IC6	2	Linear Voltage Regulator, 5V, 100mA, SOIC-8 +EP (PG-DSO-8, e-Pad)	Infineon Technologies	TLS810D1EJV50
IC2, IC3, IC4	3	Single channel IGBT gate driver IC in wide body package	Infineon Technologies	1ED3122MC12H
IC5	1	Rail-to-Rail Input and Output, 0.95nV/√Hz Low Noise, Op Amp Family	Linear Technology	LT6200CS6-10#TRMPBF

Designator	Quantity	Description	Manufacturer	Part number
IC7	1	NAND Gate, 2 Channel, Schmitt Trigger Inputs, VSSOP-8 (US8)	Texas Instruments	SN74LVC2G132DCU
IC8	1	HIGH SPEED, 100V, SELF OSCILLATING 50% DUTY CYCLE, HALF-BRIDGE DRIVER, SOIC-8	International Rectifier	IR2085SPBF
J1, J2, J3	3	TERM BLOCK 2POS 5.08mm, WR-TBL Series 2135, Horizontal, THT	Wurth Elektronik	691213510002
J4, J5	2	Header, 100mil, 2x1, Gold, Vertical, THT	Wurth Elektronik	61300211121
LED1, LED2, LED3, LED5, LED6	5	LED, Green, 2.1V (Vf), 0.020A (If), 0603, SMT	Lite-On	LTST-C190GKT
LED4	1	LED, Red, 2.0V (Vf), 0.020A (If), 0603, SMT	Lite-On	LTST-C190CKT
R1	1	RES, 100R, 1%, 0.1W, 0603	Vishay-Dale	CRCW0603100RFKEA
R2, R10, R22, R24	4	RES, 10k, 1%, 0.1W, 0603	Vishay-Dale	CRCW060310K0FKEA
R3, R9	2	RES, 4R7, 1%, 0.25W, 1206	Vishay-Dale	CRCW12064R70FKEA
R4, R26, R27	3	RES, 270R, 1%, 0.1W, 0603	Vishay-Dale	CRCW0603270RFKEA
R5, R7, R11, R15, R21	5	RES, 0R, 1%, 0.1W, 0603	Vishay-Dale	CRCW0603000Z0EA
R6, R14	2	RES, 10R, 1%, 0.25W, 1206	Vishay-Dale	CRCW120610R0FKEA
R12	1	RES, 51k, 1%, 0.1W, 0603	Vishay-Dale	CRCW060351K0FKEA
R13	1	RES, 4k7, 1%, 0.1W, 0603	Vishay-Dale	CRCW06034K70FKEA
R16	1	RES, 1M, 1%, 0.1W, 0603	Vishay-Dale	CRCW06031M00FKEA
R18, R20, R23, R37	4	RES, 1k, 1%, 0.1W, 0603	Vishay-Dale	CRCW06031K00FKEA
R19	1	RES, 0R003, 1%, 3W, 2512	Bourns Inc.	CRE2512-FZ-R003E-3
R25	1	RES, 47k, 1%, 0.1W, 0603	Vishay-Dale	CRCW060347K0FKEA
R28, R31, R36, R41	4	RES, 0R15, 1%, 0.2W, 0603	Vishay-Dale	RCWE0603R150FKEA
R29, R38	2	RES, 3k65, 1%, 0.1 W, 0603	Vishay-Dale	CRCW06033K65FKEA
R30, R40	2	RES, 100k, 1%, 0.1W, 0603	Vishay-Dale	CRCW0603100KFKEA
R32	1	RES, 68k, 1%, 0.1W, 0603	Vishay-Dale	CRCW060368K0FKEA
R33, R42	2	RES, 820R, 1%, 0.1W, 0603	Vishay-Dale	CRCW0603820RFKEA
R34, R35	2	RES, 15R, 1%, 0.25W, 1206	Vishay-Dale	CRCW120615R0FKEA
R39	1	RES, 0R22, 1%, 0.5W, 1206	Vishay-Dale	RCWE1206R220FKEA
S1	1	Switch, Tactile, SPST-NO, 0.1A, 16V, SMT	Bourns	7914G-1-000E
T3	1	MOSFET, 2-CH, N-CH, 30V, 3.7A, TSOP-6	Vishay Semiconductor	SI3932DV-T1-GE3

Designator	Quantity	Description	Manufacturer	Part number
T4, T5	2	Transistor, PNP, 45V, 0.1A, SOT-23	ON Semiconductor	BC857C
TR1	1	Drive Transformer, SMT	Wurth Elektronik	750318016
C1, C13	0	CAP, Film, 0.33µF, 450V, ±5%, THT	TDK	B32522N6334J000
C8, C18	0	CAP, CERM, 0.001µF, 50V, ±10%, X7R, 0603	Wurth Elektronik	885012206083

3.4 Connectors and pin assignment

The following table describes connectors and their pin assignments on the PCB.

Table 5 Connectors and pin assignment

Connector	Pin	Marking/function	Note
J1	1, 2	V-HV	High-voltage power supply
J2	1	PHASE	Half-bridge phase output
J2	2	C_OUT	C1/C2, C13/C14 center point between V-HV and HV_GND
J3	1	SENSE	Shunt sense output
J3	2	HV_GND	High-voltage reference pin
J4	1	+15V_IN	15 V for external power supply with protection diode
J4, J5	2	GND	Logic-side ground reference
J5	1	VCC1	Logic-side supply voltage 5 V monitor point
CON1	1	/ENABLE	Enable signal, low active
CON1	2	/FAULT	Logic-side supply voltage, 3.3 V or 5 V
CON1	3, 5, 7, 9	GND	Logic-side ground reference
CON1	4	/RST	Reset input for overcurrent flip-flop, connected to S1
CON1	6	IN_T	Logic PWM input high-side gate driver
CON1	8	IN_B	Logic PWM input low-side gate driver
CON1	10	VCC1	Logic-side supply voltage 5 V monitor point

4 References and appendices

4.1 Abbreviations and definitions

Table 6 Abbreviations

Abbreviation	Meaning
CE	Conformité Européenne
EMI	Electromagnetic interference
UL	Underwriters Laboratories

Revision history

Document version	Date of release	Description of changes
1.00	2021-04-13	Initial version

Trademarks
All referenced product or service names and trademarks are the property of their respective owners.

Edition 2021-04-13

Published by

Infineon Technologies AG

81726 Munich, Germany

© 2021 Infineon Technologies AG. All Rights Reserved.

Do you have a question about this document?

Email: erratum@infineon.com

Document reference

UG-2021-21

For further information on the product, technology, delivery terms and conditions and prices please contact your nearest Infineon Technologies office **(www.infineon.com).**

WARNINGS
Due to technical requirements products may contain dangerous substances. For information on the types in question please contact your nearest Infineon Technologies office.

Except as otherwise explicitly approved by Infineon Technologies in a written document signed by authorized representatives of Infineon Technologies, Infineon Technologies' products may not be used in any applications where a failure of the product or any consequences of the use thereof can reasonably be expected to result in personal injury.