## Index


| Page | Schematics Page Name |
|---|---|
| 01 | Cover Sheet / Revision History |
| 02 | BGT60LTR11AIP_Shield |


01_Revision_History.SchDoc

## Revision History

| Rev. | Rel. | Date | Author | Description | Page(s) |
|---|---|---|---|---|---|
| 2.0 | 1.0 | CW30-2023 | | - First Release | 2 |
| 2.2 | 1.0 | CW21-2024 | | - Solved coupling issues in the layout | 2 |

# BGT60UTR11AIP Shield

## Default_Assembly

## V2.2


**Infineon Technologies AG**
IFAG PSS RFS AS SAE ECO
Am Campeon 1-15 - 85579 Neubiberg - Germany


**05/2024**

**<DOC_Preliminary>**
**Restricted**

Please click on the required variant to see the corresponding assembly.


LEGAL DISCLAIMER
THE INFORMATION GIVEN IN THIS DOCUMENT IS GIVEN FOR ILLUSTRATING PURPOSES ONLY. THE RECIPIENT OF THIS DOCUMENT MUST VERIFY ANY FUNCTION DESCRIBED HEREIN IN THE REAL APPLICATION. INFINEON TECHNOLOGIES HEREBY DISCLAIMS ANY AND ALL WARRANTIES AND LIABILITIES OF ANY KIND (INCLUDING WITHOUT LIMITATION WARRANTIES OF NON-INFRINGEMENT OF INTELLECTUAL PROPERTY RIGHTS OF ANY THIRD PARTY) WITH RESPECT TO ANY AND ALL INFORMATION GIVEN IN THIS DOCUMENT.



Infineon Technologies AG
IFAG PSS RFS AS SAE ECO
Am Campeon 1-15 - 85579 Neubiberg - Germany


| | | | |
|---|---|---|---|
| Title | BGT60UTR11AIP Shield | | |
| Variant | Default_Assembly | Approved | <Appr.> |
| Size: A3 | Document Name: 01_Revision_History.SchDoc | Rel.: <Rel.> | Rev.: V2.2 |

Author: <Author>
Date: 27.05.2024 Time: 11:05:31 SVN Revision: Not in version control
© Infineon Technologies AG 2024. All Rights Reserved.

# 02_BGT60UTR11AIP_Shield_V2.2.SchDoc

## BGT60UTR11AIP Radar MMIC

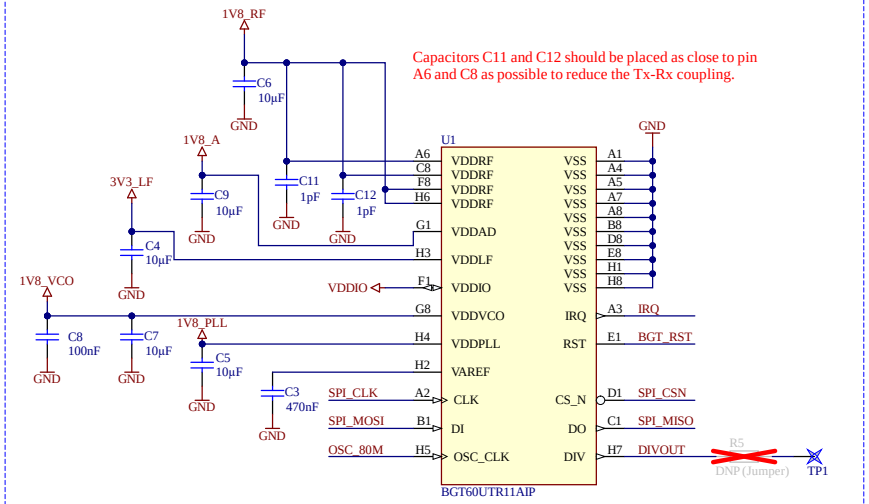


## MCU configuration resistors

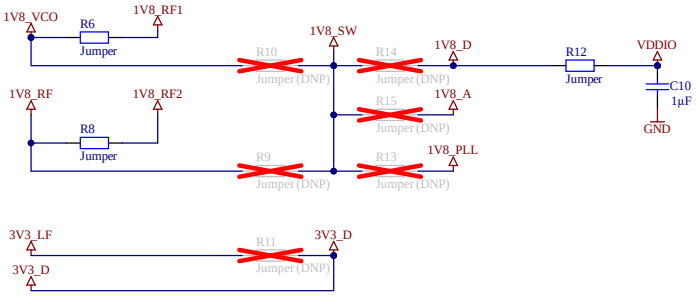


## 80 Mhz Oscillator

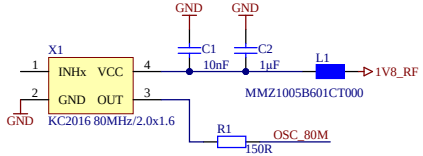


## Hirose Connectors

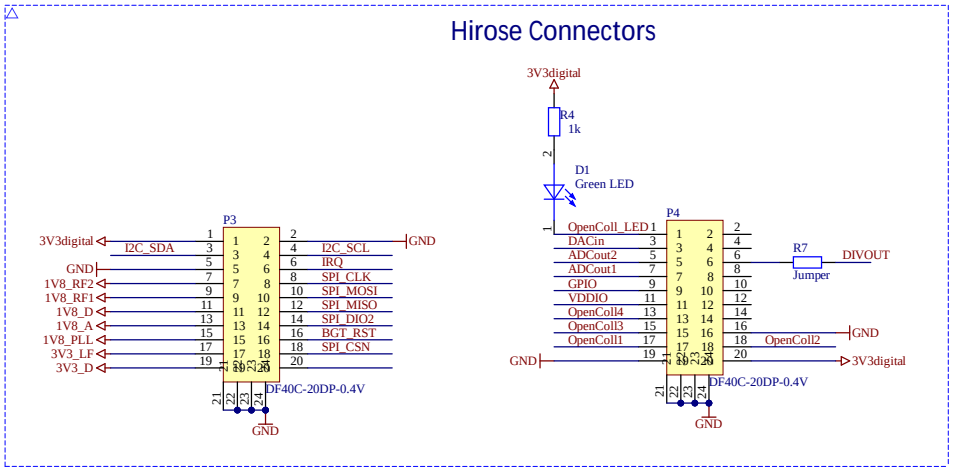


## Castellated holes

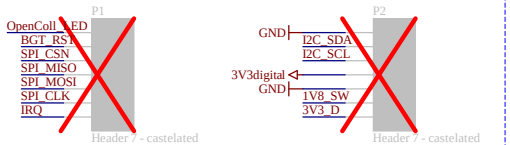


## EEPROM

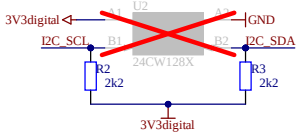


**<DOC_Preliminary>**
**Restricted**


Infineon Technologies AG
IFAG PSS RFS AS SAE ECO
Am Campeon 1-15 - 85579 Neubiberg - Germany


| | | | |
|---|---|---|---|
| Title | BGT60UTR11AIP Shield | | |
| Variant | Default_Assembly | Approved | <Appr.> |
| Size: A3 | Document Name: 02_BGT60UTR11AIP_Shield_V2.2.SchDoc | Rel. <Rel.> | Rev. V2.2 |
| Author: <Author> | | | |
| Date: 27.05.2024 Time: 11:05:31 | SVN Revision: Not in version control | | |

© Infineon Technologies AG 2024. All Rights Reserved.