01_Revision_History.SchDoc

Index

Page	Schematics Page Name
01	Cover Sheet / Revision History
02	TOP Sheet
03	Power Supply StepUp Converter
04	DPS368
05	Infineon_PAS Sensor
06	BUZZER CIRCUIT
07	ADAFRUIT WICED WIFI FEATHER

Revision History

Rev.	Rel.	Date	Author	Description	Page(s)
4.4	1.0	CW32-2024		- First Release	2

EVAL_PASCO2_WING_12V

[No Variations]

V4.4

Infineon Technologies AG

IFAG PSS RFS 3DS AS SAE ECO

Am Campeon 1-15, 85579 Neubiberg, Germany

2024

LEGAL DISCLAIMER

THE INFORMATION GIVEN IN THIS DOCUMENT IS GIVEN FOR ILLUSTRATING PURPOSES ONLY. THE RECIPIENT OF THIS DOCUMENT MUST VERIFY ANY FUNCTION DESCRIBED HEREIN IN THE REAL APPLICATION. INFINEON TECHNOLOGIES HEREBY DISCLAIMS ANY AND ALL WARRANTIES AND LIABILITIES OF ANY KIND (INCLUDING WITHOUT LIMITATION WARRANTIES OF NON-INFRINGEMENT OF INTELLECTUAL PROPERTY RIGHTS OF ANY THIRD PARTY) WITH RESPECT TO ANY AND ALL INFORMATION GIVEN IN THIS DOCUMENT.

Final
Public

Infineon Technologies AG
IFAG PSS RFS 3DS AS SAE ECO
Am Campeon 1-15, 85579 Neubiberg, Germany

Title	EVAL_PASCO2_WING_12V		
Variant	[No Variations]	Approved	<Appr.>
Size: A3	Document Name: 01_Revision_History.SchDoc	Rel.	Rev. V4.4
Author: AEH			
Date: 12.08.2024 Time: 13:14:09	SVN Revision: Not in version control		
© Infineon Technologies 2024	Sheet 1 of 7		

TOP

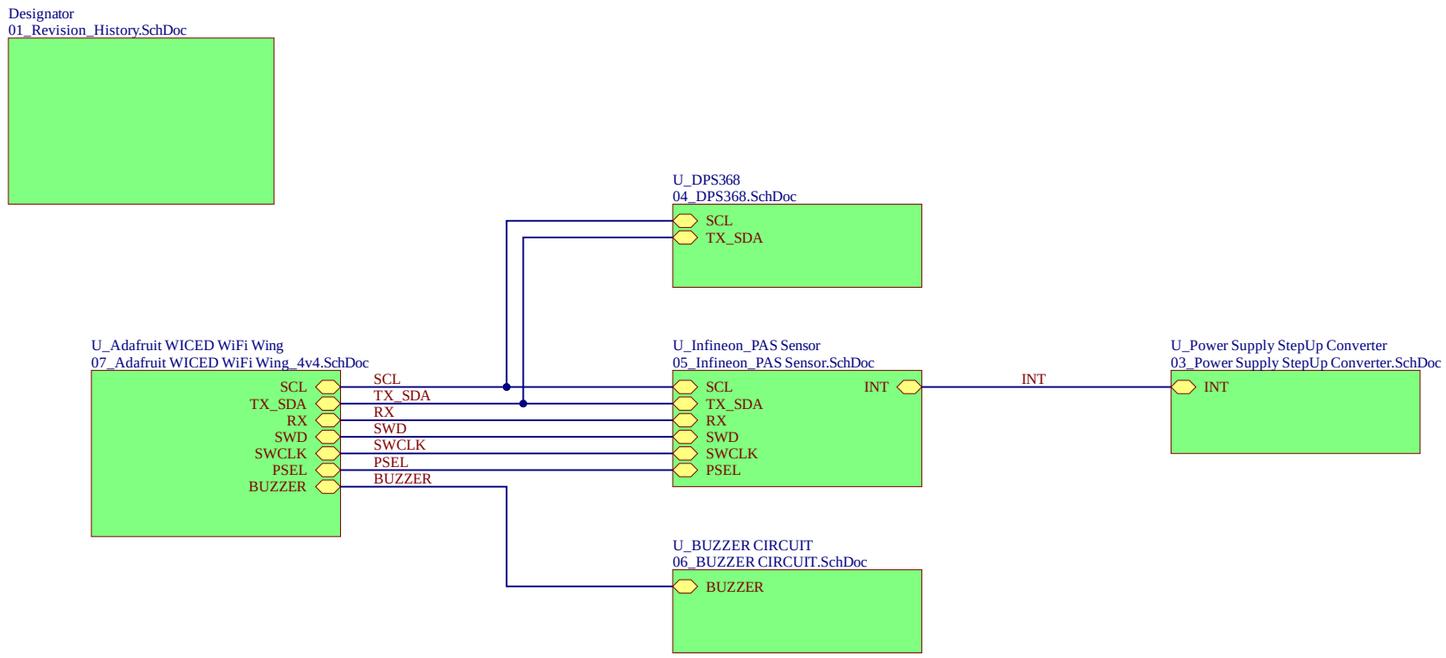

Infineon	Infineon Technologies Siemensstrasse 2 9500 Villach Author	TOP Sheet	
		2	
Size A3	08.08.2024	Revision V4.4	Sheet 2 of 7

C:\ECAD Designs\Adafruit WICED WiFi Wing_4v4\02_TOP.SchDoc

POWER SUPPLY STEP UP CONVERTER

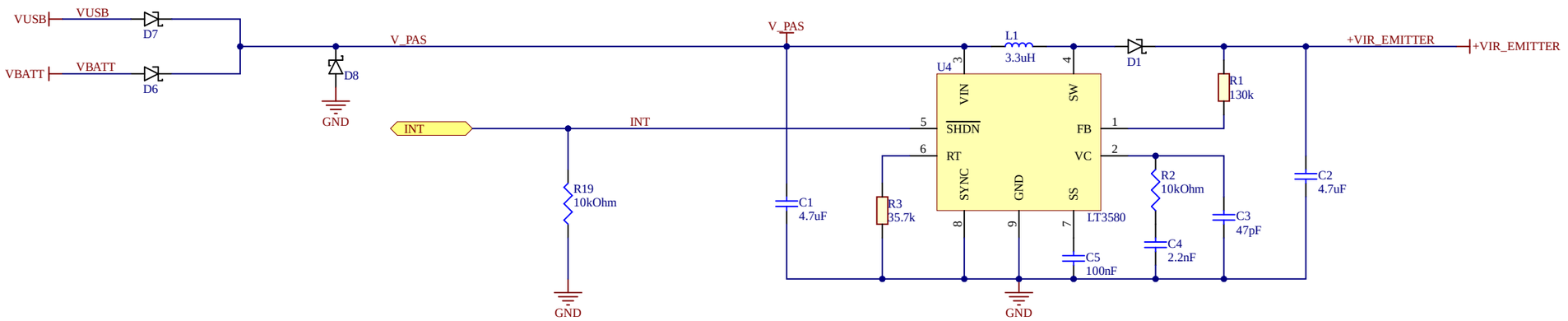

Final
Public

Infineon Technologies AG
IFAG PSS RFS 3DS AS SAE ECO
Am Campeon 1-15, 85579 Neubiberg, Germany

Title	EVAL_PASCO2_WING_12V		
Variant	[No Variations]	Approved	<Appr.>
Size: A3	Document Name: 03_Power Supply StepUp Converter.SchDoc	Rel.	Rev. V4.4
Author: AEH			
Date: 12.08.2024 Time: 13:14:28	SVN Revision: Not in version control		
© Infineon Technologies 2024	Sheet 3 of 7		

04_DPS368.SchDoc

DPS368

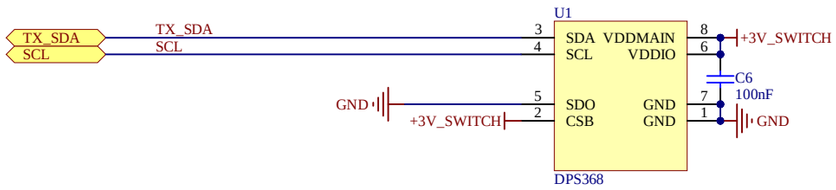

Final
Public

Infineon Technologies AG
IFAG PSS RFS 3DS AS SAE ECO
Am Campeon 1-15, 85579 Neubiberg, Germany

Title	EVAL_PASCO2_WING_5V		
Variant	[No Variations]	Approved	<Appr.>
Size: A3	Document Name: 04_DPS368.SchDoc	Rel.	Rev. V4.4

Author: AEH
Date: 08.08.2024 Time: 15:13:57 SVN Revision: Not in version control
© Infineon Technologies 2024 Sheet 4 of 7

INFINEON PAS CO2 SENSOR

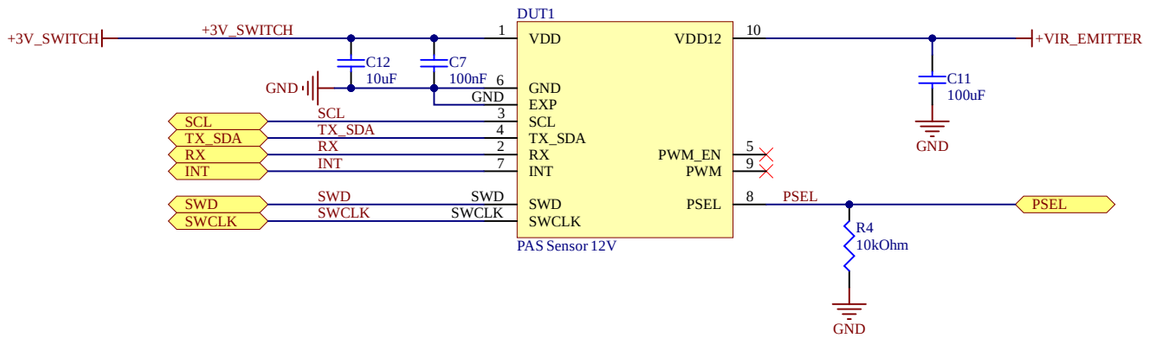

Final
Public

Infineon Technologies AG **IFAG PSS RFS 3DS AS SAE ECO** Am Campeon 1-15, 85579 Neubiberg, Germany			
Title	EVAL_PASCO2_WING_12V		
Variant	[No Variations]	Approved	<Appr.>
Size: A3	Document Name: 05_Infineon_PAS Sensor.SchDoc	Rel.	Rev. V4.4
Author: AEH			
Date: 12.08.2024 Time: 13:14:38	SVN Revision: Not in version control		
© Infineon Technologies 2024	Sheet 5 of 7		

06_BUZZER CIRCUIT.SchDoc

BUZZER CIRCUIT

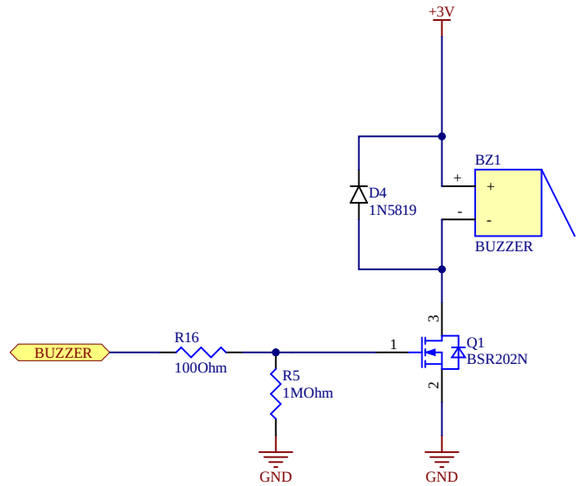

Final
Public

Infineon Technologies AG
IFAG PSS RFS 3DS AS SAE ECO
Am Campeon 1-15, 85579 Neubiberg, Germany

Title	EVAL_PASCO2_WING_5V		
Variant	[No Variations]	Approved	<Appr.>
Size: A3	Document Name: 06_BUZZER CIRCUIT.SchDoc	Rel.	Rev. V4.4
Author: AEH			
Date: 08.08.2024 Time: 15:15:17	SVN Revision: Not in version control		
© Infineon Technologies 2024	Sheet 6 of 7		

07_Adafruit WICED WiFi Wing_4v4.SchDoc

ADAFRUIT WICED WIFI FEATHER

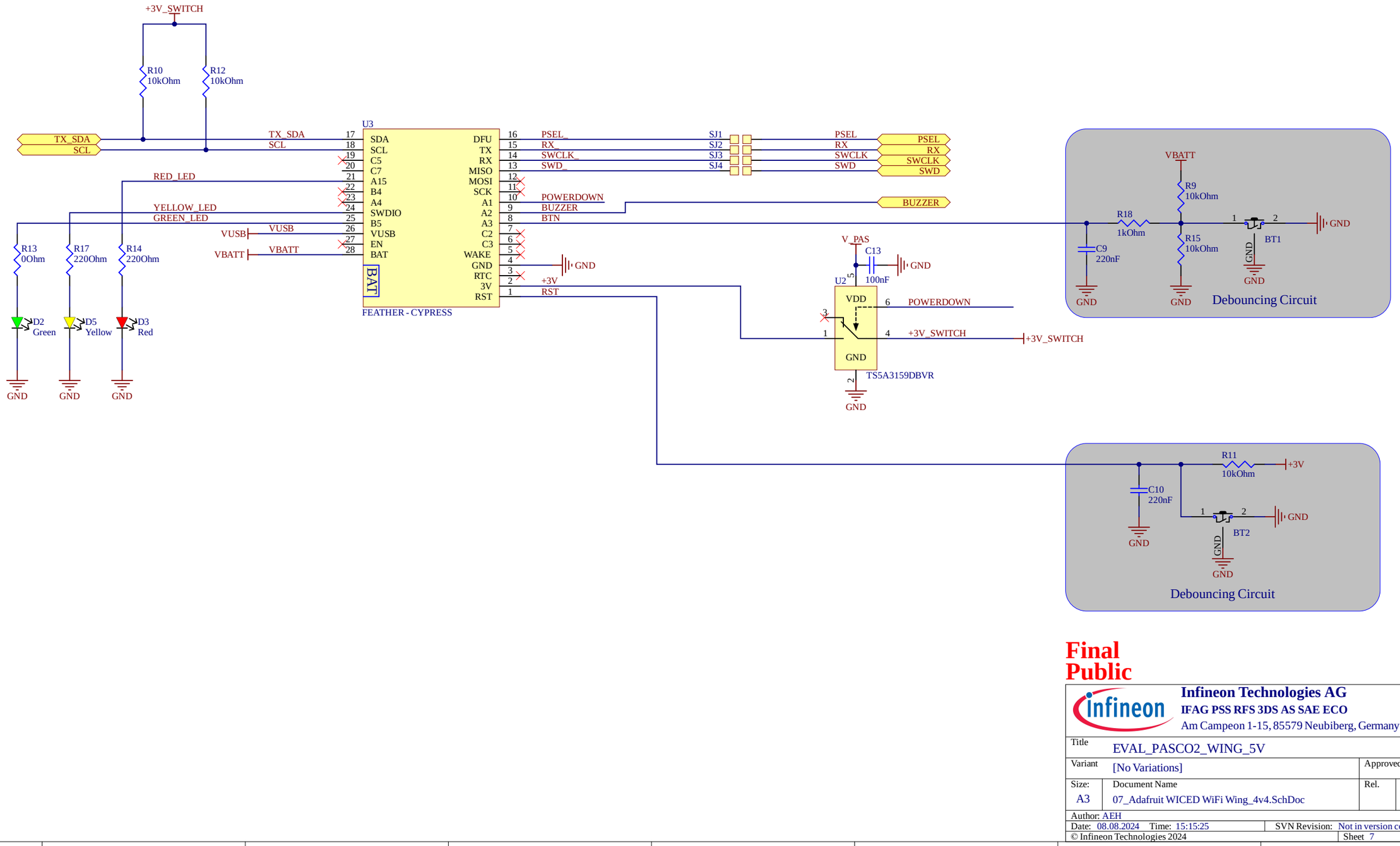

Final
Public

Infineon Technologies AG **IFAG PSS RFS 3DS AS SAE ECO** Am Campeon 1-15, 85579 Neubiberg, Germany			
Title	EVAL_PASCO2_WING_5V		
Variant	[No Variations]	Approved	<Appr.>
Size: A3	Document Name: 07_Adafruit WICED WiFi Wing_4v4.SchDoc	Rel.	Rev. V4.4
Author: AEH			
Date: 08.08.2024 Time: 15:15:25	SVN Revision: Not in version control		
© Infineon Technologies 2024	Sheet 7 of 7		