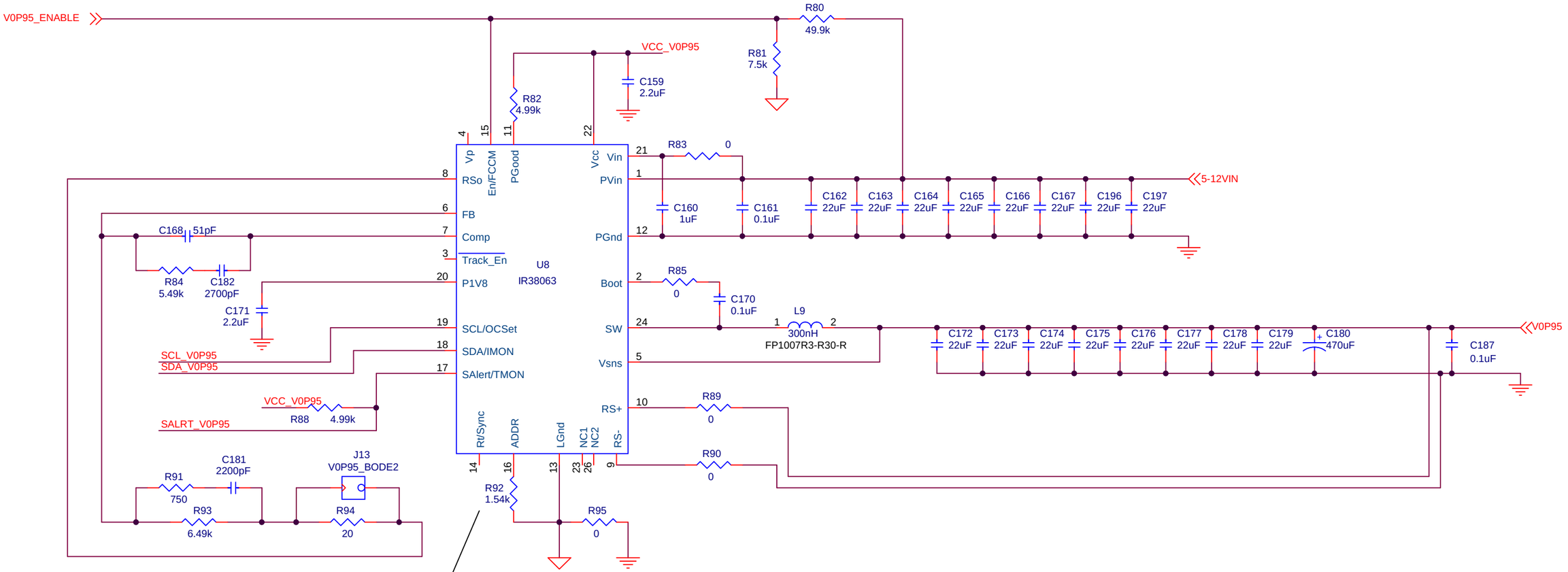

R VAL / OFFSET
0.00k / +0
1.05k / +1
1.54k / +2
2.05k / +3
2.61k / +4
3.24k / +5
3.83k / +6
4.53k / +7
5.23k / +8
6.04k / +9
6.98k / +10
7.87k / +11
8.87k / +12
9.76k / +13
10.7k / +14
11.8k / +15
(Default BASE: 0x10 I2C / 0x40 PMBus)
Resulting Address: 0x12 / 0x42

Notes -
1% DC TOB
3% AC TOB
750kHz Fsw
~100kHz BW
Supports upto 25A
Transient Model - 4.8A Loadstep ~ +/- 18mV AC TOB

Title	IR38063 - 0.95V 25A PMBus VR	
Size B	Document Number	Rev E1
Date: Tuesday, October 11, 2016	Sheet 1 of 1	