PowIRStage:TSEN to TOUT Ratio: 1:1.64

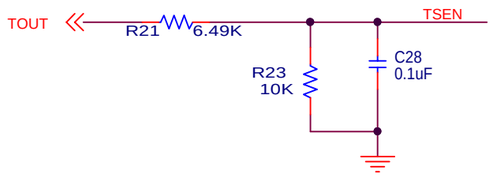

LOOP1 LL - DISABLED

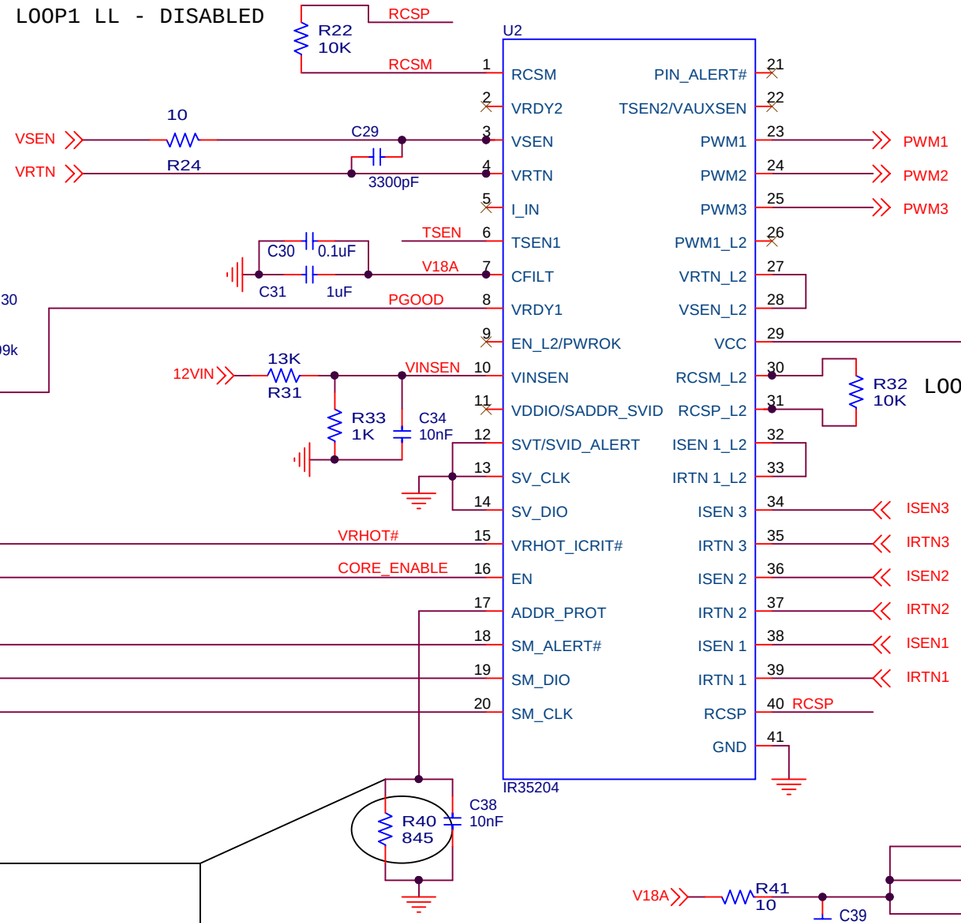

LOOP2 LL - DISABLED

ADDR Resistor Offset Table

ADDR R Value	ADDR OFFSET (from Base)
0.845kOhm	+0
1.30kOhm	+1
1.78kOhm	+2
2.32kOhm	+3
2.87kOhm	+4
3.48kOhm	+5
4.12kOhm	+6
4.75kOhm	+7
5.49kOhm	+8
...	...
12.10kOhm	+15

DEFAULT ADDRESSING:
I2C BASE ADDR = 0x10
PMBus BASE ADDR = 0x50

Resulting Addressing:
I2C - 0x10
PMBus - 0x50

Title: Power Macro Demo Board		
Size: B	Document Number: EV105-002	Rev: E1
Date: Wednesday, February 08, 2017	Sheet 1 of 2	

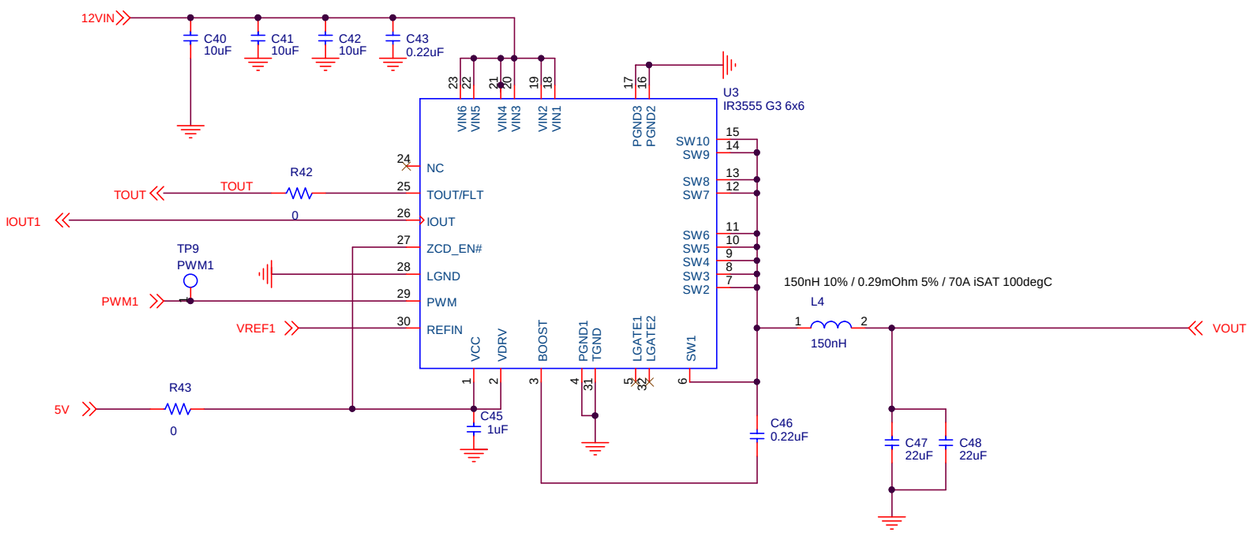

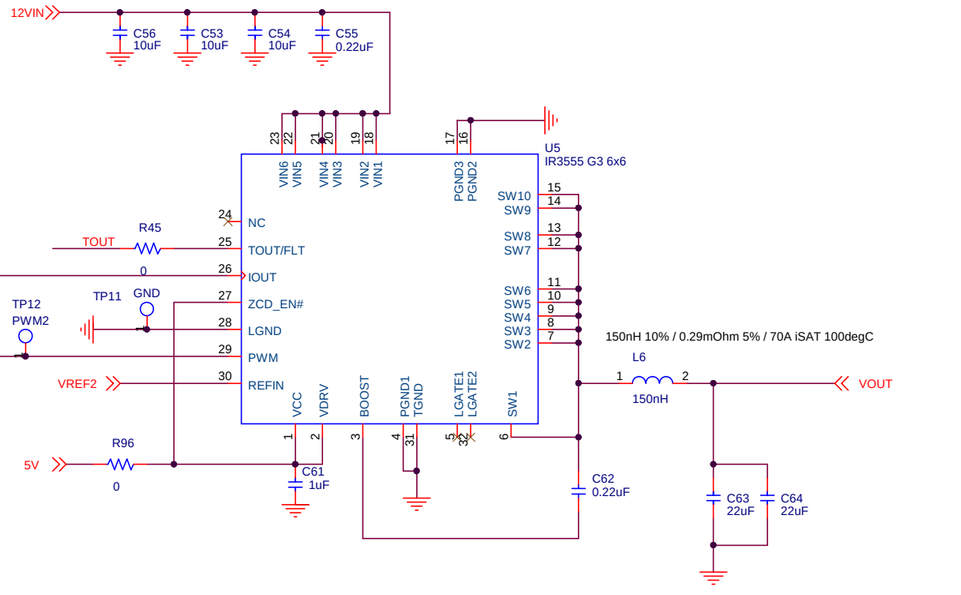

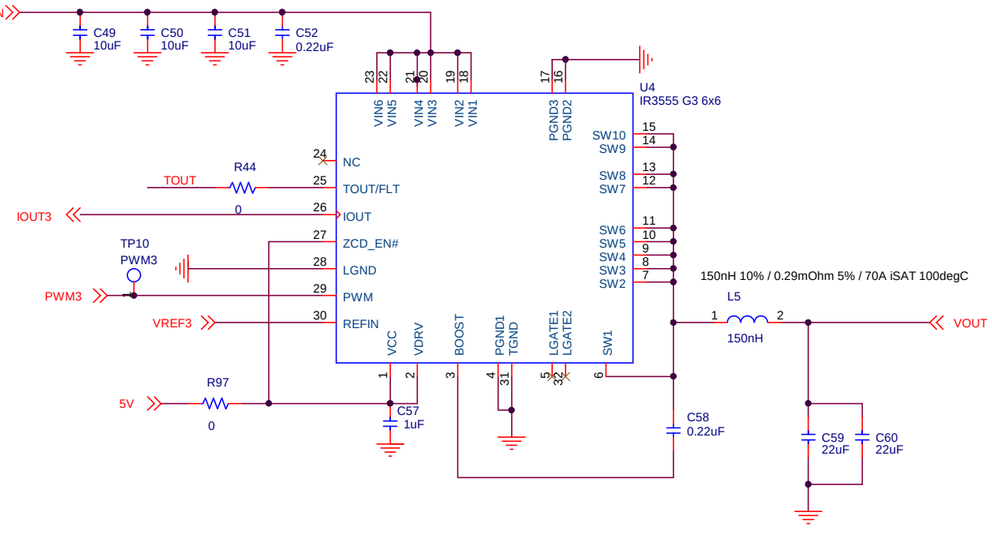


```
Inductor Crosses:
 - Delta HCFE107010-151-79
 - Eaton FP1010R1-R150-R
 - Pulse PA4390.151HL
 - Eaton FP1007R3-R15-R


PowIRStage Crosses:
 - IR3555 6x6mm QFN 60A Device (~25A TDC)
 - IR3556 6x6mm QFN 50A Device (~20A TDC)
 - IR3557 6x6mm QFN 40A Device (~15A TDC)
```

Notes -
Designed for upto 25A / Phase AVG Current (75A RMS)
Designed for upto 35A / Phase PEAK Current (105A Peak)
Designed for low ripple and high transient performance
500kHz Fsw

Title	Power Macro Demo Board	
Size	Document Number EV105-002	Rev E1
Date: Wednesday, February 08, 2017	Sheet 2 of 2	