01_Revision_History.SchDoc

Index

Page	Schematics Page Name
01	Cover Sheet / Revision History
02	Top Level
03	
04	
05	
06	
07	
08	
09	
10	

Revision History

Rev.	Rel.	Date	Author	Description	Page(s)
1.0	RC00	2021-04	GW	- Initial design	

<Project Name>

[No Variations]

<Rev.>

Infineon Technologies AG

IFAG DES TCP PCB

Am Campeon 1-15 - 85579 Neubiberg - Germany

05/2019

U_02_Top_Level
02_Top_Level.SchDoc

LEGAL DISCLAIMER
THE INFORMATION GIVEN IN THIS DOCUMENT IS GIVEN FOR ILLUSTRATING PURPOSES ONLY. THE RECIPIENT OF THIS DOCUMENT MUST VERIFY ANY FUNCTION DESCRIBED HEREIN IN THE REAL APPLICATION. INFINEON TECHNOLOGIES HEREBY DISCLAIMS ANY AND ALL WARRANTIES AND LIABILITIES OF ANY KIND (INCLUDING WITHOUT LIMITATION WARRANTIES OF NON-INFRINGEMENT OF INTELLECTUAL PROPERTY RIGHTS OF ANY THIRD PARTY) WITH RESPECT TO ANY AND ALL INFORMATION GIVEN IN THIS DOCUMENT.

<DOC_Preliminary>
<DOC_ConfidentialStatus>

Infineon Technologies AG
IFAG DES TCP PCB
Am Campeon 1-15 - 85579 Neubiberg - Germany

Title	<Project Name>		
Variant	[No Variations]	Approved	<Appr.>
Size: A3	Document Name: 01_Revision_History.SchDoc	Rel.: <Rel.>	Rev.: <Rev.>
Date: 29.07.2026	Time: 11:26:39	Author: <Author>	Sheet 1 of 5

© Infineon Technologies AG 2019. All Rights Reserved.

02_Top_Level.SchDoc

Daughter Board

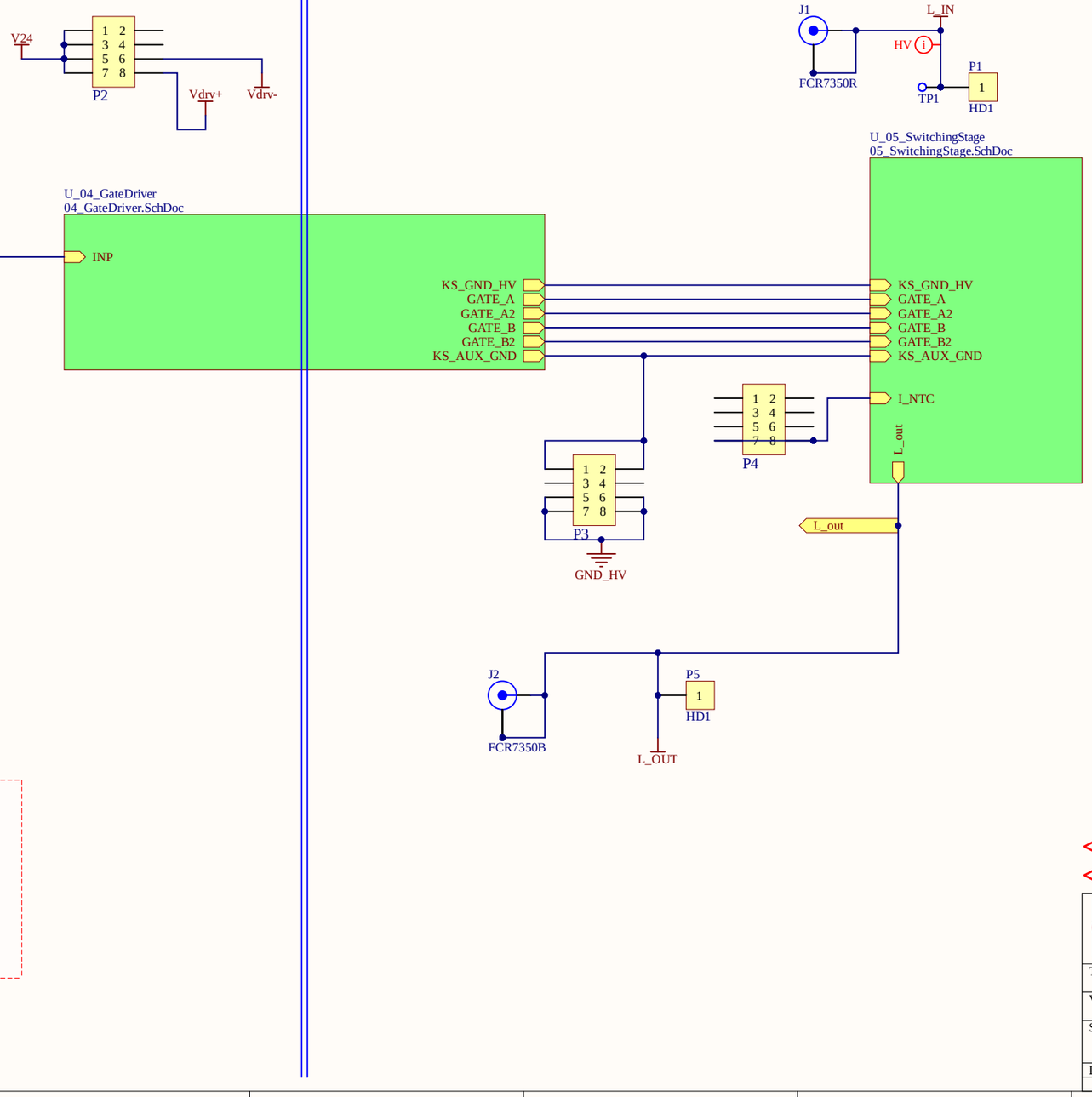

<DOC_Preliminary>
<DOC_ConfidentialStatus>

Infineon Technologies AG
IFAG DES TCP PCB
Am Campeon 1-15 - 85579 Neubiberg - Germany

Title	<Project Name>		
Variant	[No Variations]	Approved	<Appr.>
Size: A3	Document Name: 02_Top_Level.SchDoc	Rel.: <Rel.>	Rev.: <Rev.>
Date: 29.07.2026	Time: 11:26:39	Author: <Author>	Sheet 2 of 5

© Infineon Technologies AG 2019. All Rights Reserved.

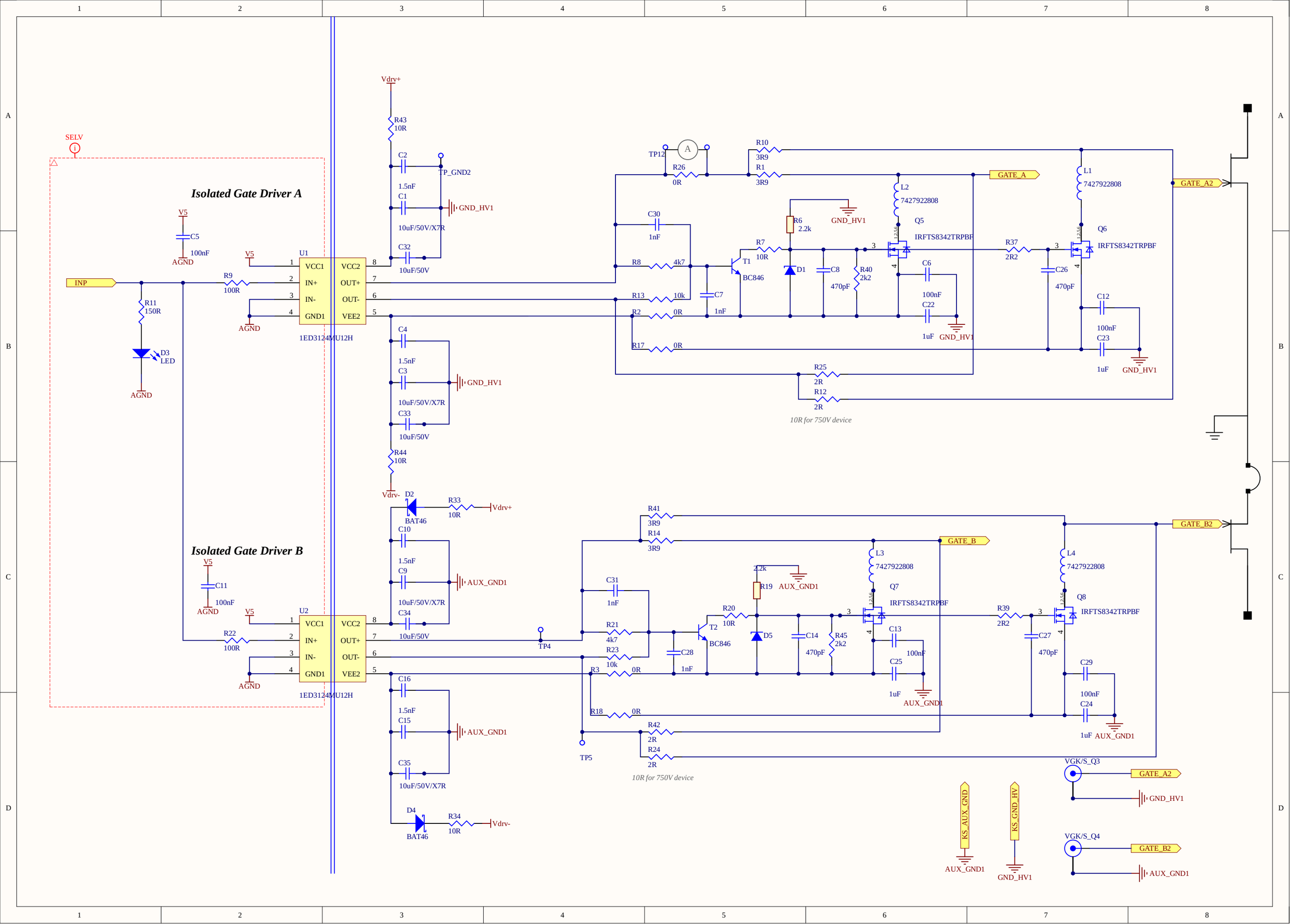

Isolated Gate Driver A
Isolated Gate Driver B
SELV
INP
V5
AGND
C5
100nF
R9
100R
R11
150R
D3
LED
U1
VCC1
IN+
IN-
GND1
VCC2
OUT+
OUT-
VEE2
1ED3124MU12H
Vdrv+
R43
10R
C2
1.5nF
C1
10uF/50V/X7R
C32
10uF/50V
TP_GND2
GND_HV1
C4
1.5nF
C3
10uF/50V/X7R
C33
10uF/50V
R44
10R
Vdrv-
D2
BAT46
R33
10R
C10
1.5nF
C9
10uF/50V/X7R
C34
10uF/50V
AUX_GND1
U2
R22
100R
C11
100nF
C16
1.5nF
C15
C35
10uF/50V/X7R
D4
R34
10R
TP4
TP5
TP12
R26
0R
R10
3R9
R1
3R9
GATE_A
GATE_A2
C30
1nF
R8
4k7
R13
10k
R2
0R
R17
0R
C7
1nF
T1
BC846
R6
2.2k
R7
10R
D1
C8
470pF
R40
2k2
L2
7427922808
Q5
IRFTS8342TRPBF
C6
100nF
C22
1uF
R37
2R2
C26
470pF
L1
7427922808
Q6
C12
100nF
C23
1uF
R25
2R
R12
2R
10R for 750V device
R41
3R9
R14
3R9
GATE_B
GATE_B2
C31
1nF
R21
4k7
R23
10k
R3
0R
R18
0R
R42
2R
R24
2R
C28
1nF
T2
BC846
R20
10R
2.2k
R19
D5
C14
470pF
R45
2k2
L3
7427922808
Q7
C13
100nF
C25
1uF
R39
2R2
C27
470pF
L4
7427922808
Q8
C29
100nF
C24
1uF
10R for 750V device
VGK/S_Q3
VGK/S_Q4
KS_AUX_GND
KS_GND_HV

05_SwitchingStage.SchDoc

L_IN
HV
VGK/S_Q1
GATE_A
GND_HV1
D_Q1
VDK/S_Q1-3
PK106-4
VGK/S_Q2
GATE_B
AUX_GND1
D_Q2
VDK/S_Q2-4
PK106-4
TP7
TP9
TP6
TP8
Q1
Q3
GATE_A2
0R
R46
R48
C36
10nF
C38
20nF
TP13
I_NTC
R27
B57332V5
R28
0R
R29
DNP
R30
DNP
HV/2
T3
DNP
P13
HD1
C19
Cap
DNP
D8
MOV
D9
DNP
HV1
KS_GND_HV
GND_HV1
P7
P10
HD1
P8
HD1
NT1
GND_HV
KS_AUX_GND
C37
20nF
0R
R47
C39
20nF
0R
R49
Q2
Q4
GATE_B
GATE_B2
D_Q2
L_OUT

<DOC_Preliminary>
<DOC_ConfidentialStatus>

Infineon Technologies AG
IFAG DES TCP PCB
Am Campeon 1-15 - 85579 Neubiberg - Germany

Title	<Project Name>		
Variant	[No Variations]	Approved	<Appr.>
Size: A3	Document Name: 05_SwitchingStage.SchDoc	Rel.: <Rel.>	Rev.: <Rev.>
Date: 29.07.2026	Time: 11:26:39	Author: <Author>	Sheet 4 of 5

© Infineon Technologies AG 2019. All Rights Reserved.

Miscellaneous.SchDoc



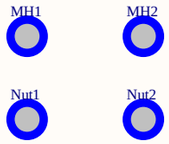

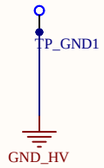

<DOC_Preliminary>
<DOC_ConfidentialStatus>

Infineon Technologies AG
IFAG DES TCP PCB
Am Campeon 1-15 - 85579 Neubiberg - Germany

Title	<Project Name>		
Variant	[No Variations]	Approved	<Appr.>
Size: A3	Document Name: Miscellaneous.SchDoc	Rel.: <Rel.>	Rev.: <Rev.>
Date: 29.07.2026 Time: 11:26:39	Author: <Author>	Sheet 5	of 5

© Infineon Technologies AG 2019. All Rights Reserved.