

UB Series

Low Pressure Drop and
Low Thermal Resistance Heat Sink

ALPHA

ALPHA Low Pressure Drop and Low Thermal Resistance Heat Sink UB10

DIM

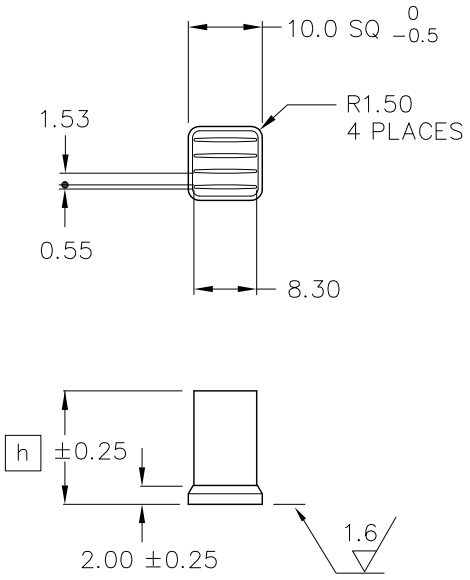

MODEL	HEIGHT [h]	WEIGHT (grams)
UB10−5B	5	0.6
UB10−10B	10	0.8
UB10−15B	15	1.0
UB10−20B	20	1.2

MATERIAL : A 6063
FINISH : BLACK ANODIZE
DIMENSIONS : mm

DATA

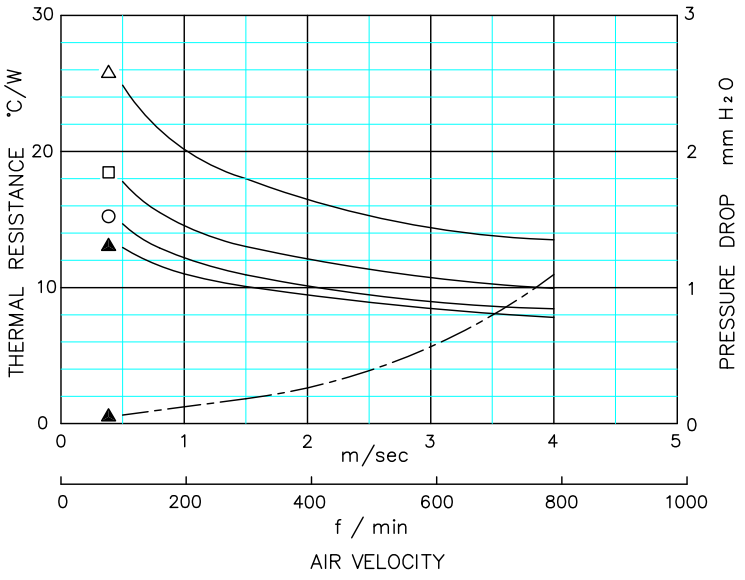

△ UB10−5B
□ UB10−10B
○ UB10−15B
▲ UB10−20B

DUCTED CONDITION
DUMMY HEATER SIZE: 8.0 SQ
THERMAL RESISTANCE ————
PRESURE DROP —— - ——

BASED ON ALPHA'S STANDARD TEST PROCEDURE.
REFER TO TECHNICAL INFORMATION.

Alpha Company Ltd.
256−1 UEDA,NUMAZU−CITY SHIZUOKA−PREF.,JAPAN
PHONE +81(55)966 0789
FAX +81(55)966 9192
E mail : alpha@micforg.co.jp
URL : http://www.micforg.co.jp

Alpha Novatech, Inc. − a subsidiary of Alpha Company.
473 Sapena Ct. #12 Santa Clara, CA 95054 USA
PHONE +1(408)567−8082
FAX +1(408)567−8053
E mail : sales@alphanovatech.com
URL : http://www.alphanovatech.com

ALPHA

Low Pressure Drop and Low Thermal Resistance Heat Sink UB19

DIM

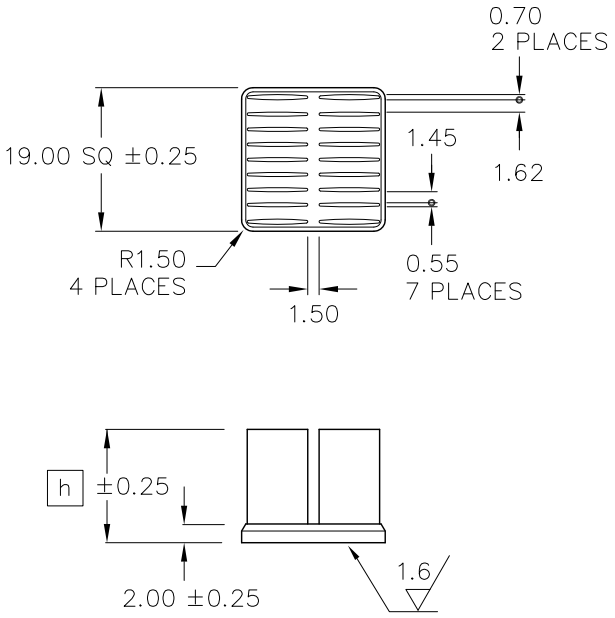

MODEL	HEIGHT h	WEIGHT (grams)
UB19−6B	6	2.6
UB19−7B	7	2.8
UB19−10B	10	3.3
UB19−15B	15	4.2
UB19−20B	20	5.1
UB19−25B	25	6.0

MATERIAL : A 6063
FINISH : BLACK ANODIZE
DIMENSIONS : mm

DATA

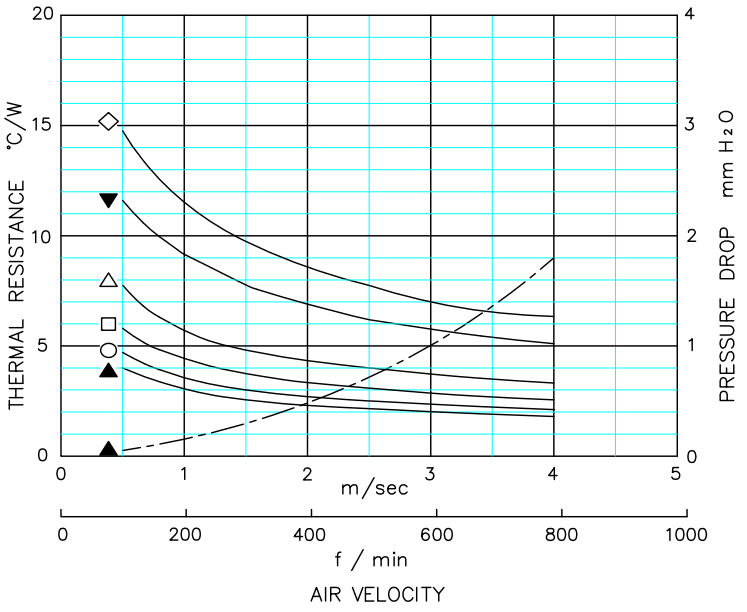

◇ UB19−6B
▼ UB19−7B
△ UB19−10B
□ UB19−15B
○ UB19−20B
▲ UB19−25B

DUCTED CONDITION
DUMMY HEATER SIZE: 12.7 SQ
THERMAL RESISTANCE ————
PRESURE DROP —— - ——

BASED ON ALPHA'S STANDARD TEST PROCEDURE.
REFER TO TECHNICAL INFORMATION.

Alpha Company Ltd.
256−1 UEDA,NUMAZU−CITY SHIZUOKA−PREF.,JAPAN
PHONE +81(55)966 0789
FAX +81(55)966 9192
E mail : alpha@micforg.co.jp
URL : http://www.micforg.co.jp

Alpha Novatech, Inc. − a subsidiary of Alpha Company.
473 Sapena Ct. #12 Santa Clara, CA 95054 USA
PHONE +1(408)567−8082
FAX +1(408)567−8053
E mail : sales@alphanovatech.com
URL : http://www.alphanovatech.com

ALPHA Low Pressure Drop and Low Thermal Resistance Heat Sink UB25

DIM

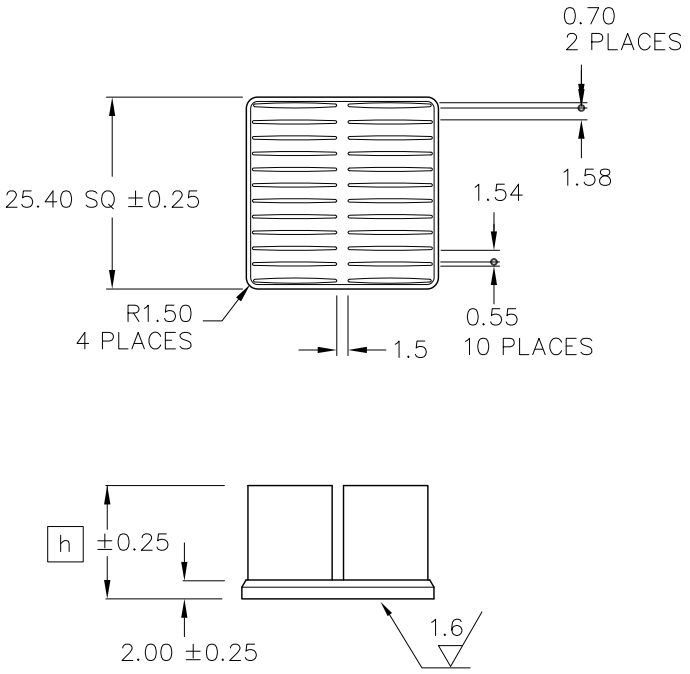

MODEL	HEIGHT [h]	WEIGHT (grams)
UB25−6B	6	4.8
UB25−7B	7	5.2
UB25−10B	10	6.4
UB25−15B	15	8.1
UB25−20B	20	9.6
UB25−25B	25	11.2

MATERIAL : A 6063
FINISH : BLACK ANODIZE
DIMENSIONS : mm

DATA

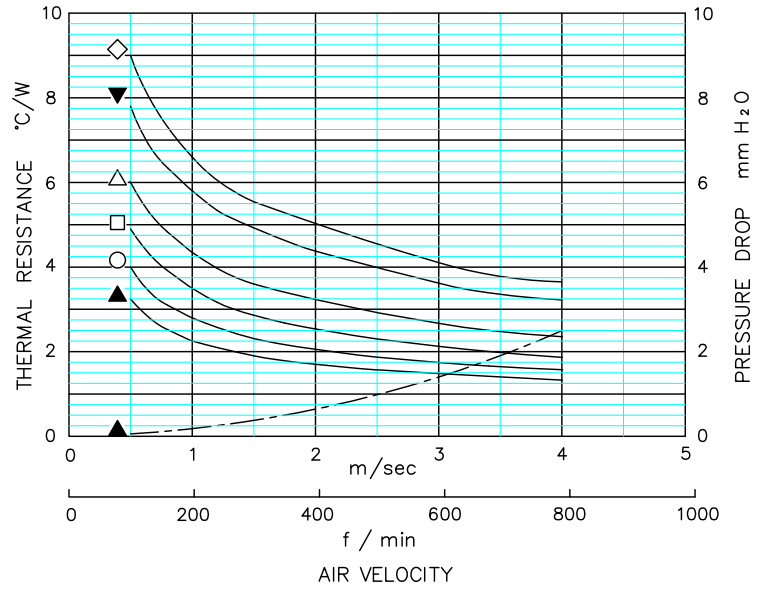

◇ UB25−6B
▼ UB25−7B
△ UB25−10B
□ UB25−15B
○ UB25−20B
▲ UB25−25B

● DUCTED CONDITION
DUMMY HEATER SIZE: 12.7 SQ
THERMAL RESISTANCE ————
PRESURE DROP —— - ——

■ BASED ON ALPHA'S STANDARD TEST PROCEDURE.
REFER TO TECHNICAL INFORMATION.

Alpha Company Ltd.
256−1 UEDA,NUMAZU−CITY SHIZUOKA−PREF.,JAPAN
PHONE +81(55)966 0789
FAX +81(55)966 9192
E mail : alpha@micforg.co.jp
URL : http://www.micforg.co.jp

Alpha Novatech, Inc. − a subsidiary of Alpha Company.
473 Sapena Ct. #12 Santa Clara, CA 95054 USA
PHONE +1(408)567−8082
FAX +1(408)567−8053
E mail : sales@alphanovatech.com
URL : http://www.alphanovatech.com

ALPHA Low Pressure Drop and Low Thermal Resistance Heat Sink UB30

DIM

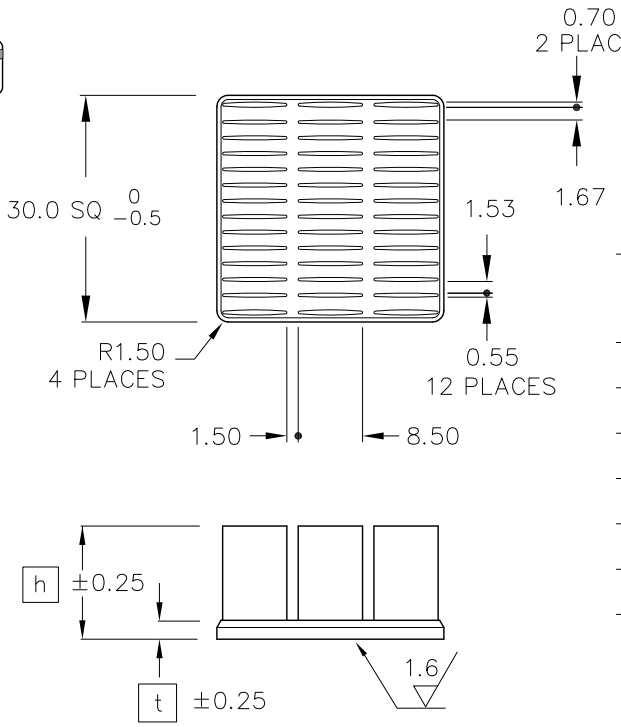

MODEL	HEIGHT [h]	THICKNESS [t]	WEIGHT (grams)
UB30−6B	6	2.0	6.8
UB30−7B	7		7.3
UB30−10B	10	2.5	9.0
UB30−15B	15		11.5
UB30−20B	20		14.0
UB30−25B	25		16.5

MATERIAL : A 6063
FINISH : BLACK ANODIZE
DIMENSIONS : mm

DATA

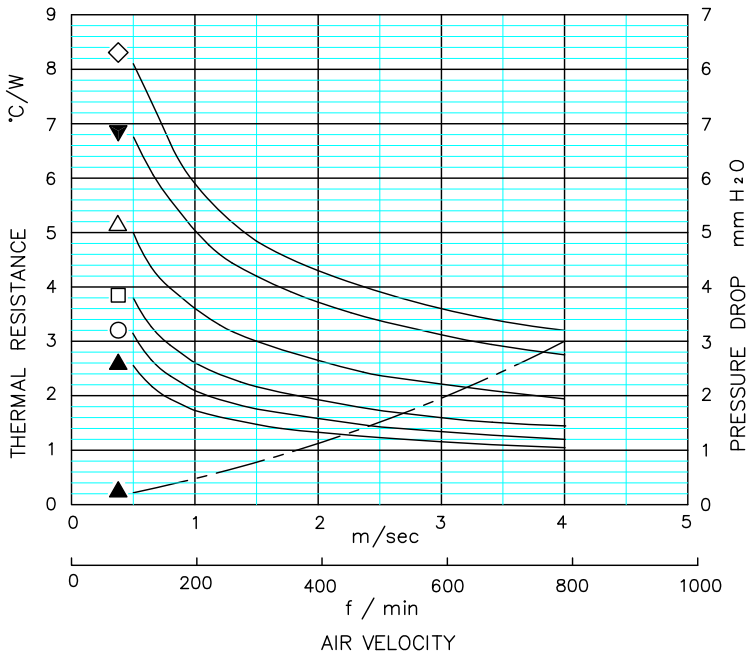

◇ UB30−6B
▼ UB30−7B
△ UB30−10B
□ UB30−15B
○ UB30−20B
▲ UB30−25B

DUCTED CONDITION
DUMMY HEATER SIZE: 12.7 SQ
THERMAL RESISTANCE ————
PRESURE DROP —— - ——

BASED ON ALPHA'S STANDARD TEST PROCEDURE.
REFER TO TECHNICAL INFORMATION.

Alpha Company Ltd.
256−1 UEDA,NUMAZU−CITY SHIZUOKA−PREF.,JAPAN
PHONE +81(55)966 0789
FAX +81(55)966 9192
E mail : alpha@micforg.co.jp
URL : http://www.micforg.co.jp

Alpha Novatech, Inc. − a subsidiary of Alpha Company.
473 Sapena Ct. #12 Santa Clara, CA 95054 USA
PHONE +1(408)567−8082
FAX +1(408)567−8053
E mail : sales@alphanovatech.com
URL : http://www.alphanovatech.com

ALPHA Low Pressure Drop and Low Thermal Resistance Heat Sink UB35

DIM

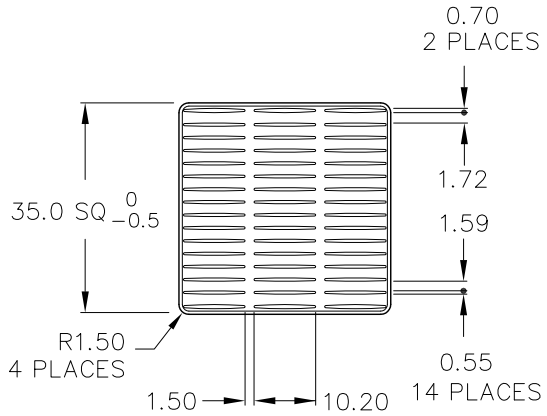

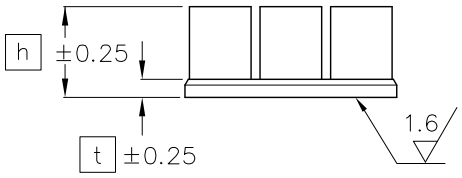

MODEL	HEIGHT [h]	THICKNESS [t]	WEIGHT (grams)
UB35−6B	6	2.0	9.2
UB35−7B	7		9.9
UB35−10B	10	3.0	13.5
UB35−15B	15		17.0
UB35−20B	20		20.5
UB35−25B	25		24.0

MATERIAL : A 6063
FINISH : BLACK ANODIZE
DIMENSIONS : mm

DATA

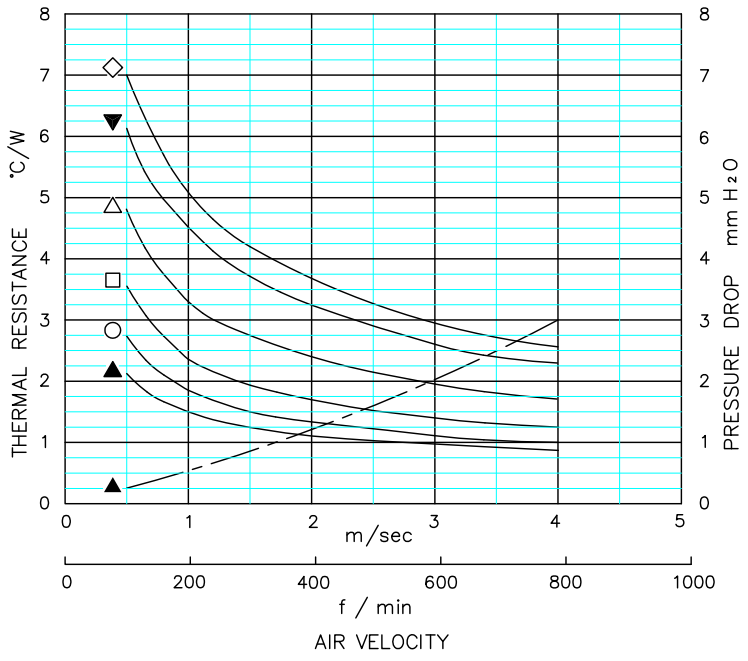

◇ UB35−6B
▼ UB35−7B
△ UB35−10B
□ UB35−15B
○ UB35−20B
▲ UB35−25B

DUCTED CONDITION
DUMMY HEATER SIZE: 12.7 SQ
THERMAL RESISTANCE ————
PRESURE DROP —— - ——

BASED ON ALPHA'S STANDARD TEST PROCEDURE.
REFER TO TECHNICAL INFORMATION.

Alpha Company Ltd.
256−1 UEDA,NUMAZU−CITY SHIZUOKA−PREF.,JAPAN
PHONE +81(55)966 0789
FAX +81(55)966 9192
E mail : alpha@micforg.co.jp
URL : http://www.micforg.co.jp

Alpha Novatech, Inc. − a subsidiary of Alpha Company.
473 Sapena Ct. #12 Santa Clara, CA 95054 USA
PHONE +1(408)567−8082
FAX +1(408)567−8053
E mail : sales@alphanovatech.com
URL : http://www.alphanovatech.com

ALPHA Low Pressure Drop and Low Thermal Resistance Heat Sink UB40

DIM

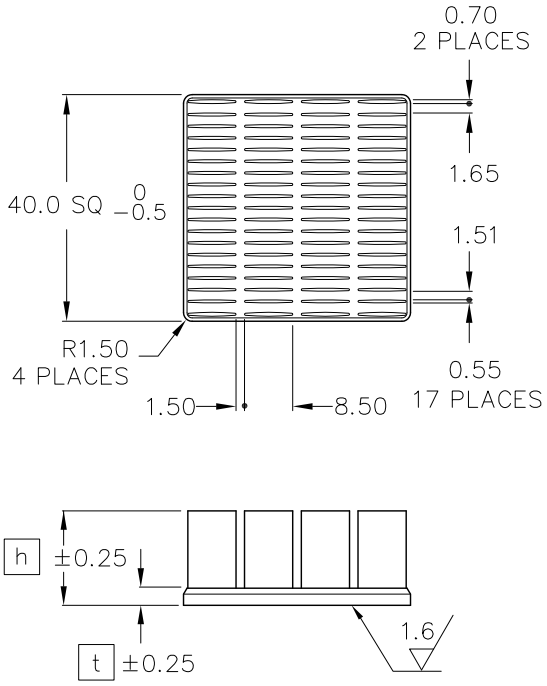

MODEL	HEIGHT [h]	THICKNESS [t]	WEIGHT (grams)
UB40−6B	6	2.0	12.0
UB40−7B	7		12.9
UB40−10B	10	3.0	17.8
UB40−15B	15		22.5
UB40−20B	20		27.3
UB40−25B	25		32.0

MATERIAL : A 6063
FINISH : BLACK ANODIZE
DIMENSIONS : mm

DATA

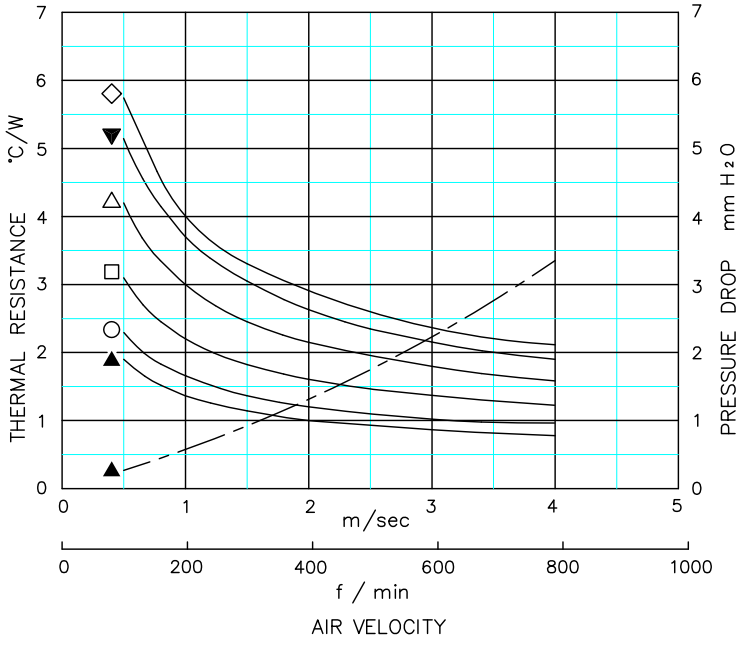

◇ UB40−6B
▼ UB40−7B
△ UB40−10B
□ UB40−15B
○ UB40−20B
▲ UB40−25B

● DUCTED CONDITION
DUMMY HEATER SIZE: 12.7 SQ
THERMAL RESISTANCE ————
PRESURE DROP —— - ——

■ BASED ON ALPHA'S STANDARD TEST PROCEDURE.
REFER TO TECHNICAL INFORMATION.

Alpha Company Ltd.
256−1 UEDA,NUMAZU−CITY SHIZUOKA−PREF.,JAPAN
PHONE +81(55)966 0789
FAX +81(55)966 9192
E mail : alpha@micforg.co.jp
URL : http://www.micforg.co.jp

Alpha Novatech, Inc. − a subsidiary of Alpha Company.
473 Sapena Ct. #12 Santa Clara, CA 95054 USA
PHONE +1(408)567−8082
FAX +1(408)567−8053
E mail : sales@alphanovatech.com
URL : http://www.alphanovatech.com

ALPHA

Low Pressure Drop and Low Thermal Resistance Heat Sink UB45

DIM

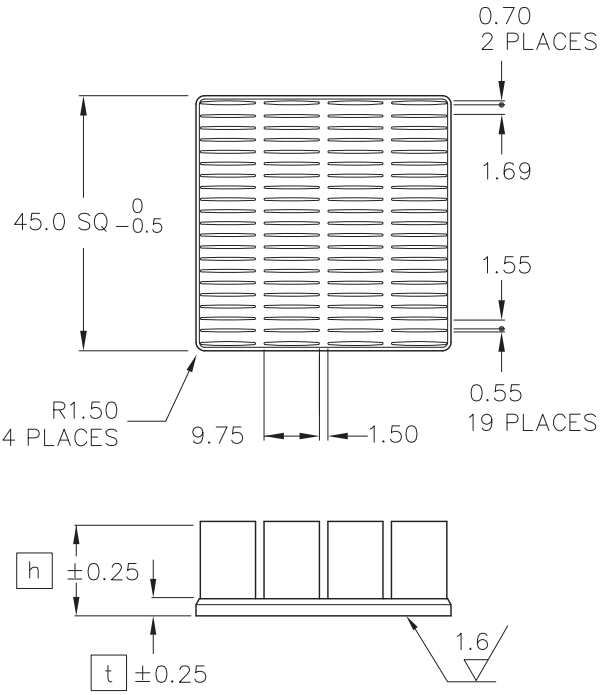

MODEL	HEIGHT [h]	THICKNESS [t]	WEIGHT (grams)
UB45−6B	6	2.5	16.8
UB45−7B	7		18.0
UB45−8B	8		19.2
UB45−9B	9		20.4
UB45−10B	10	3.0	21.8
UB45−15B	15		28.0
UB45−20B	20		34.3
UB45−25B	25		40.5

MATERIAL : A 6063
FINISH : BLACK ANODIZE
DIMENSIONS : mm

DATA

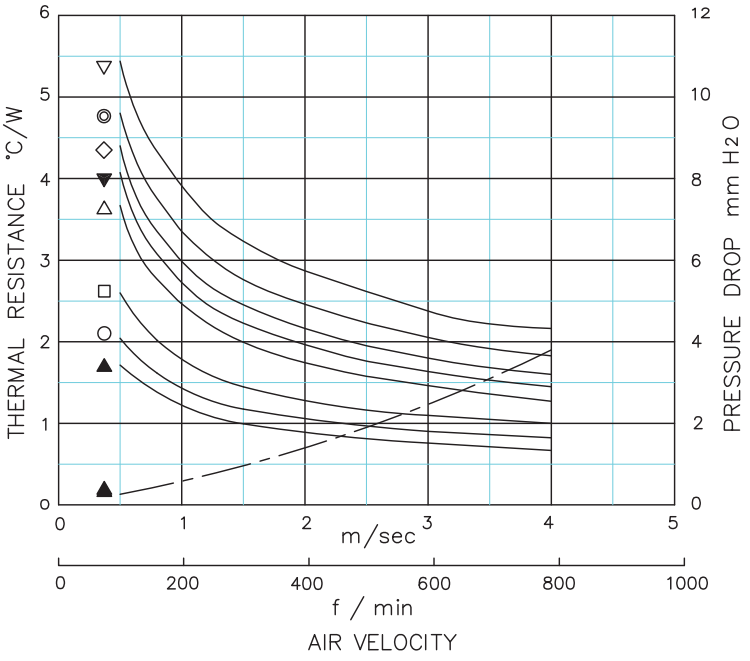

▽ UB45−6B
◎ UB45−7B
◇ UB45−8B
▼ UB45−9B
△ UB45−10B
□ UB45−15B
○ UB45−20B
▲ UB45−25B

● DUCTED CONDITION
DUMMY HEATER SIZE: 12.7 SQ
THERMAL RESISTANCE ————
PRESURE DROP —— - ——

■ BASED ON ALPHA'S STANDARD TEST PROCEDURE.
REFER TO TECHNICAL INFORMATION.

Alpha Company Ltd.
256−1 UEDA,NUMAZU−CITY SHIZUOKA−PREF.,JAPAN
PHONE +81(55)966 0789
FAX +81(55)966 9192
E mail : alpha@micforg.co.jp
URL : http://www.micforg.co.jp

Alpha Novatech, Inc. − a subsidiary of Alpha Company.
473 Sapena Ct. #12 Santa Clara, CA 95054 USA
PHONE +1(408)567−8082
FAX +1(408)567−8053
E mail : sales@alphanovatech.com
URL : http://www.alphanovatech.com

ALPHA Low Pressure Drop and Low Thermal Resistance Heat Sink UB48

DIM

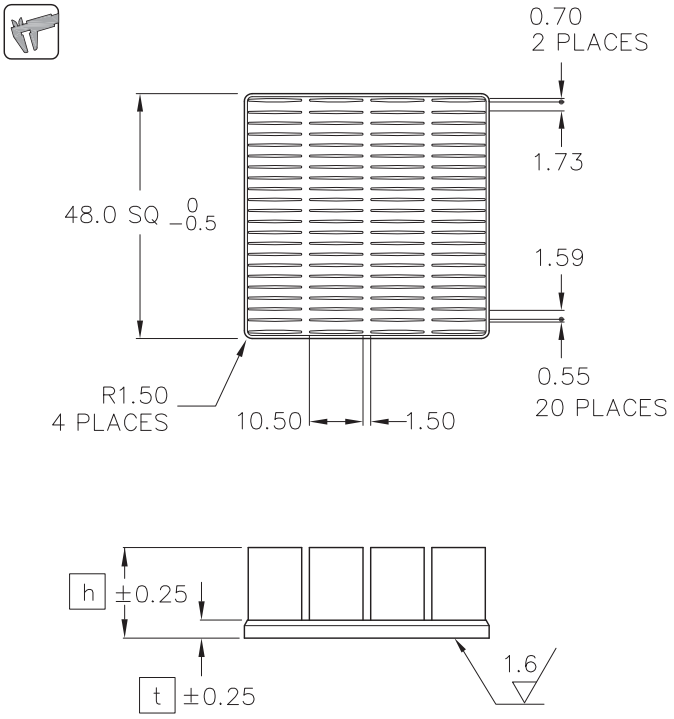

MODEL	HEIGHT [h]	THICKNESS [t]	WEIGHT (grams)
UB48−6B	6	2.5	19.4
UB48−7B	7		20.5
UB48−8B	8		21.7
UB48−9B	9		22.8
UB48−10B	10	3.5	28.5
UB48−15B	15		35.0
UB48−20B	20		41.5
UB48−25B	25		48.0

MATERIAL : A 6063
FINISH : BLACK ANODIZE
DIMENSIONS : mm

DATA

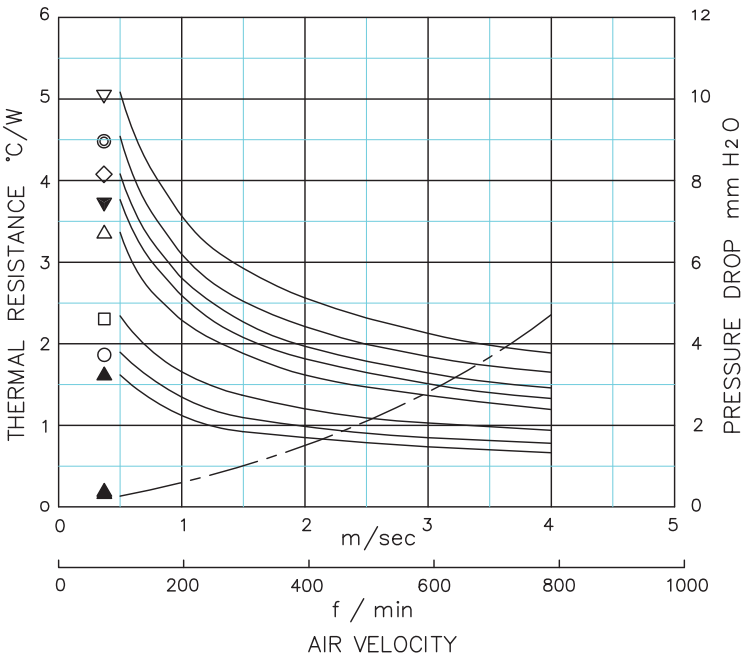

▽ UB48−6B
◎ UB48−7B
◇ UB48−8B
▼ UB48−9B
△ UB48−10B
□ UB48−15B
○ UB48−20B
▲ UB48−25B

● DUCTED CONDITION
DUMMY HEATER SIZE: 12.7 SQ
THERMAL RESISTANCE ————
PRESURE DROP —— - ——

■ BASED ON ALPHA'S STANDARD TEST PROCEDURE.
REFER TO TECHNICAL INFORMATION.

Alpha Company Ltd.
256−1 UEDA,NUMAZU−CITY SHIZUOKA−PREF.,JAPAN
PHONE +81(55)966 0789
FAX +81(55)966 9192
E mail : alpha@micforg.co.jp
URL : http://www.micforg.co.jp

Alpha Novatech, Inc. − a subsidiary of Alpha Company.
473 Sapena Ct. #12 Santa Clara, CA 95054 USA
PHONE +1(408)567−8082
FAX +1(408)567−8053
E mail : sales@alphanovatech.com
URL : http://www.alphanovatech.com

ALPHA Low Pressure Drop and Low Thermal Resistance Heat Sink UB50

DIM

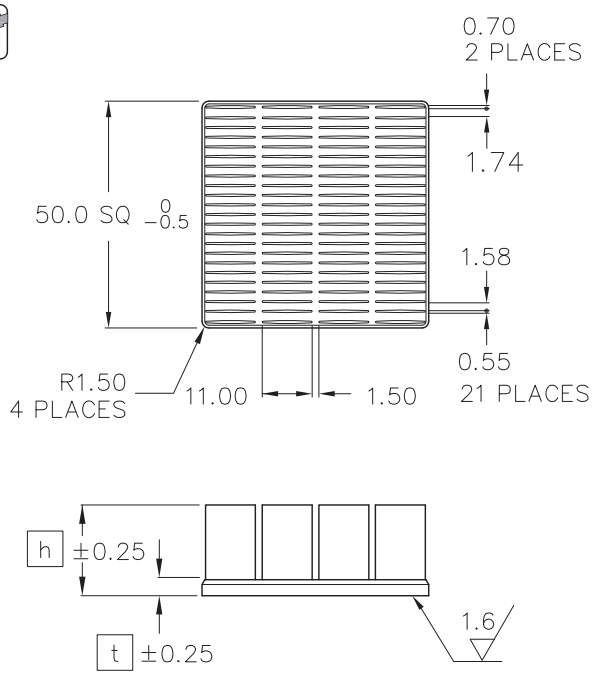

MODEL	HEIGHT [h]	THICKNESS [t]	WEIGHT (grams)
UB50−6B	6	2.5	21.0
UB50−7B	7		22.3
UB50−8B	8		23.7
UB50−9B	9		25.0
UB50−10B	10	3.5	30.5
UB50−15B	15		38.0
UB50−20B	20		45.5
UB50−25B	25		53.0

MATERIAL : A 6063
FINISH : BLACK ANODIZE
DIMENSIONS : mm

DATA

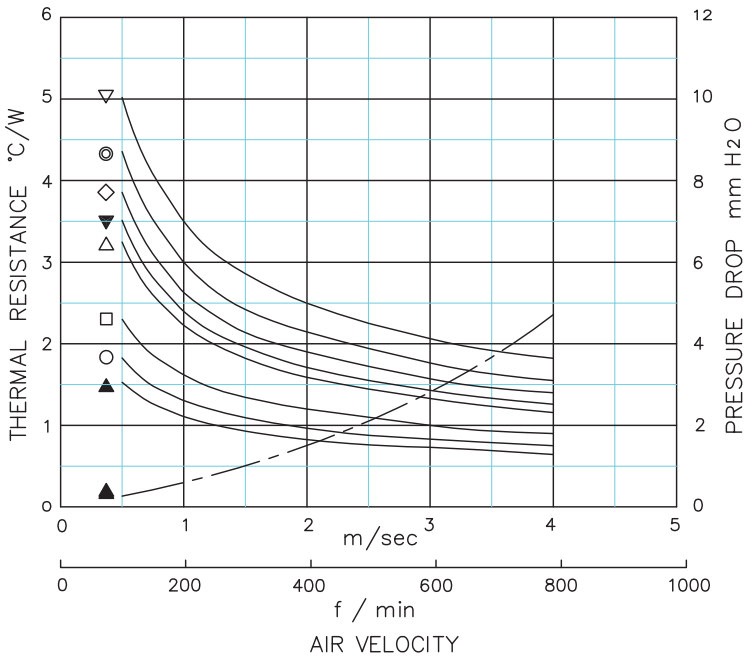

▽ UB50−6B
◎ UB50−7B
◇ UB50−8B
▼ UB50−9B
△ UB50−10B
□ UB50−15B
○ UB50−20B
▲ UB50−25B

● DUCTED CONDITION
DUMMY HEATER SIZE: 12.7 SQ
THERMAL RESISTANCE ————
PRESURE DROP —— - ——

■ BASED ON ALPHA'S STANDARD TEST PROCEDURE.
REFER TO TECHNICAL INFORMATION.

Alpha Company Ltd.
256−1 UEDA,NUMAZU−CITY SHIZUOKA−PREF.,JAPAN
PHONE +81(55)966 0789
FAX +81(55)966 9192
E mail : alpha@micforg.co.jp
URL : http://www.micforg.co.jp

Alpha Novatech, Inc. − a subsidiary of Alpha Company.
473 Sapena Ct. #12 Santa Clara, CA 95054 USA
PHONE +1(408)567−8082
FAX +1(408)567−8053
E mail : sales@alphanovatech.com
URL : http://www.alphanovatech.com

ALPHA Low Pressure Drop and Low Thermal Resistance Heat Sink UB54

DIM

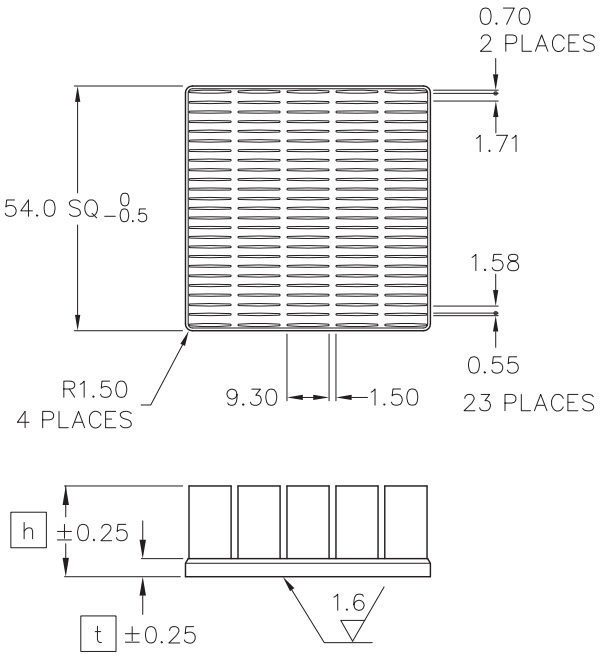

MODEL	HEIGHT [h]	THICKNESS [t]	WEIGHT (grams)
UB54-6B	6	3	28.1
UB54-7B	7		29.6
UB54-8B	8		31.0
UB54-9B	9		32.4
UB54-10B	10	4	39.3
UB54-15B	15		47.5
UB54-20B	20		55.8
UB54-25B	25		64.0

MATERIAL : A 6063
FINISH : BLACK ANODIZE
DIMENSIONS : mm

DATA

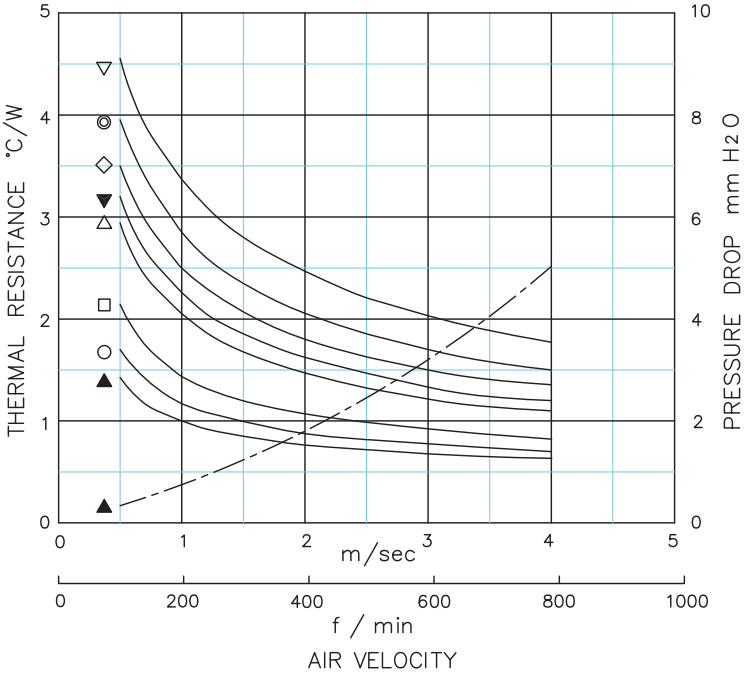

▽ UB54-6B
◎ UB54-7B
◇ UB54-8B
▼ UB54-9B
△ UB54-10B
□ UB54-15B
○ UB54-20B
▲ UB54-25B

DUCTED CONDITION
DUMMY HEATER SIZE: 12.7 SQ
THERMAL RESISTANCE ————
PRESURE DROP —— - ——

BASED ON ALPHA'S STANDARD TEST PROCEDURE.
REFER TO TECHNICAL INFORMATION.

Alpha Company Ltd.
256-1 UEDA,NUMAZU-CITY SHIZUOKA-PREF.,JAPAN
PHONE +81(55)966 0789
FAX +81(55)966 9192
E mail : alpha@micforg.co.jp
URL : http://www.micforg.co.jp

Alpha Novatech, Inc. - a subsidiary of Alpha Company.
473 Sapena Ct. #12 Santa Clara, CA 95054 USA
PHONE +1(408)567-8082
FAX +1(408)567-8053
E mail : sales@alphanovatech.com
URL : http://www.alphanovatech.com

ALPHA Low Pressure Drop and Low Thermal Resistance Heat Sink UB60

DIM

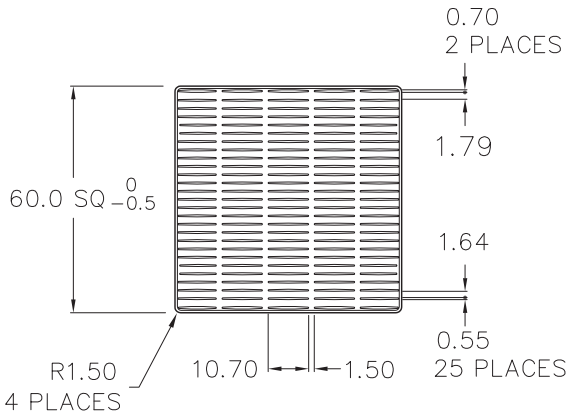

MODEL	HEIGHT [h]	THICKNESS [t]	WEIGHT (grams)
UB60−6B	6	3	35.5
UB60−7B	7		37.3
UB60−8B	8		39.2
UB60−9B	9		41.0
UB60−10B	10	4	49.5
UB60−15B	15		58.0
UB60−20B	20		66.5
UB60−25B	25		75.0

MATERIAL : A 6063
FINISH : BLACK ANODIZE
DIMENSIONS : mm

DATA

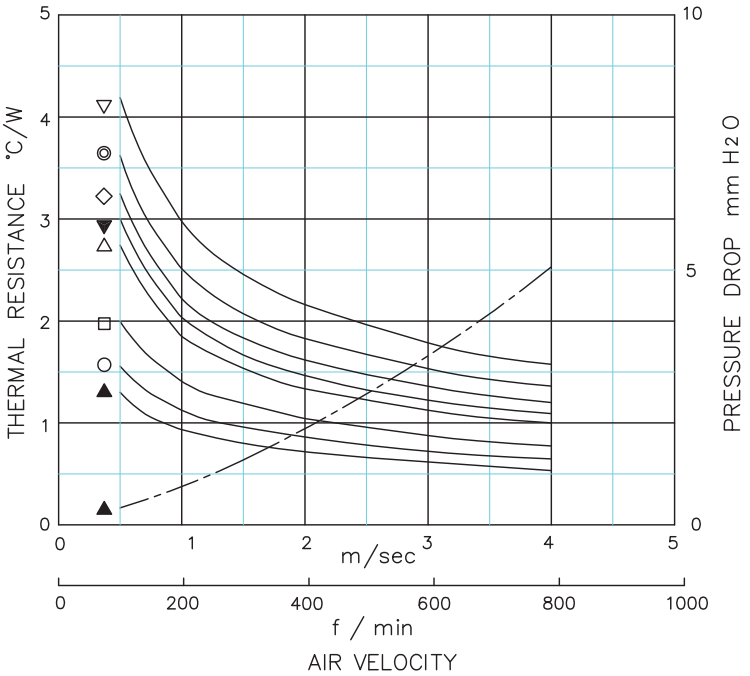

▽ UB60−6B
◎ UB60−7B
◇ UB60−8B
▼ UB60−9B
△ UB60−10B
□ UB60−15B
○ UB60−20B
▲ UB60−25B

● DUCTED CONDITION
DUMMY HEATER SIZE: 12.7 SQ
THERMAL RESISTANCE ————
PRESURE DROP —— - ——

■ BASED ON ALPHA'S STANDARD TEST PROCEDURE.
REFER TO TECHNICAL INFORMATION.

Alpha Company Ltd.
256−1 UEDA,NUMAZU−CITY SHIZUOKA−PREF.,JAPAN
PHONE +81(55)966 0789
FAX +81(55)966 9192
E mail : alpha@micforg.co.jp
URL : http://www.micforg.co.jp

Alpha Novatech, Inc. − a subsidiary of Alpha Company.
473 Sapena Ct. #12 Santa Clara, CA 95054 USA
PHONE +1(408)567−8082
FAX +1(408)567−8053
E mail : sales@alphanovatech.com
URL : http://www.alphanovatech.com

ALPHA Low Pressure Drop and Low Thermal Resistance Heat Sink UB70

DIM

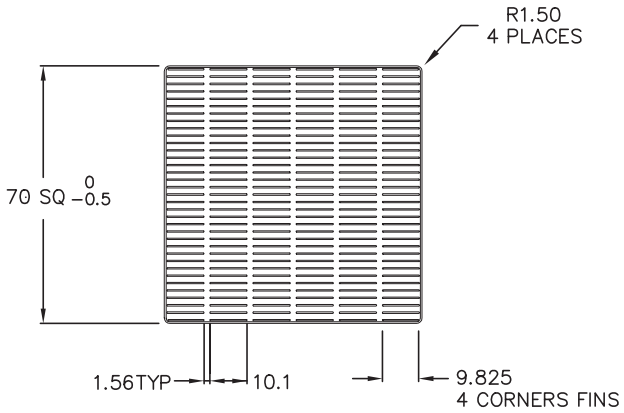

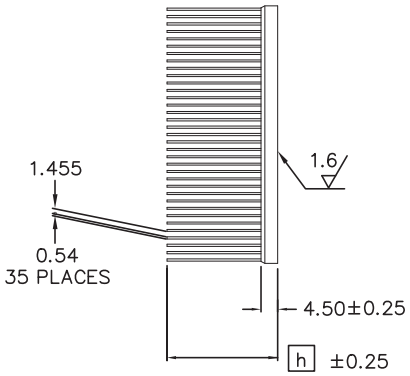

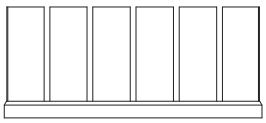

HEAT SINK
MATERIAL : A 6063
FINISH : BLACK ANODIZE

MODEL	HEIGHT [h]	WEIGHT (grams)
UB70−15B	15	86.3
UB70−20B	20	98.5
UB70−25B	25	110.7
UB70−30B	30	122.9

Dimensions : mm

DATA

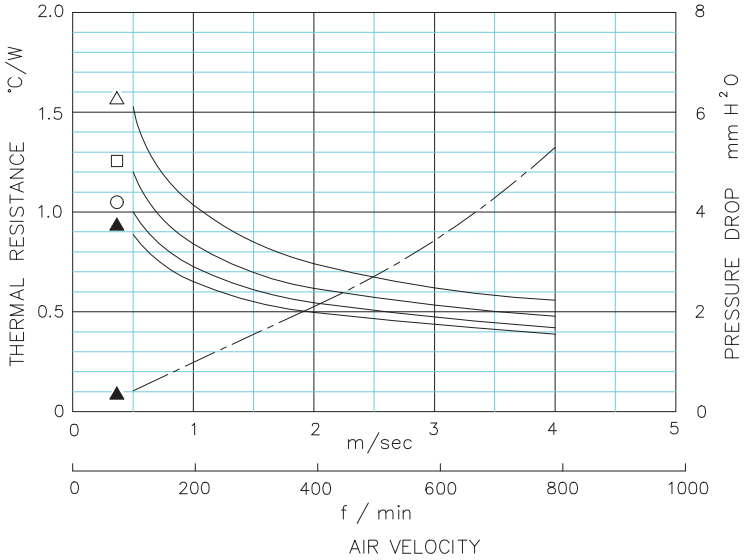

● Thermal Resistance (Ducted)
(Solid Line ———)
● Pressure Drop
(Center Line —·—)

△ UB70−15B
□ UB70−20B
○ UB70−25B
▲ UB70−30B

■ Based on Alpha's Standard Test Procedure. (Refer to page marked Technical Information.)
Dummy Heater Size : □12.7(mm)

Alpha Company Ltd.
256−1 UEDA,NUMAZU−CITY SHIZUOKA−PREF.,JAPAN
PHONE +81(55)966 0789
FAX +81(55)966 9192
E mail : alpha@micforg.co.jp
URL : http://www.micforg.co.jp

Alpha Novatech, Inc. − a subsidiary of Alpha Company.
473 Sapena Ct. #12 Santa Clara, CA 95054 USA
PHONE +1(408)567−8082
FAX +1(408)567−8053
E mail : sales@alphanovatech.com
URL : http://www.alphanovatech.com

ALPHA Low Pressure Drop and Low Thermal Resistance Heat Sink UB80

DIM

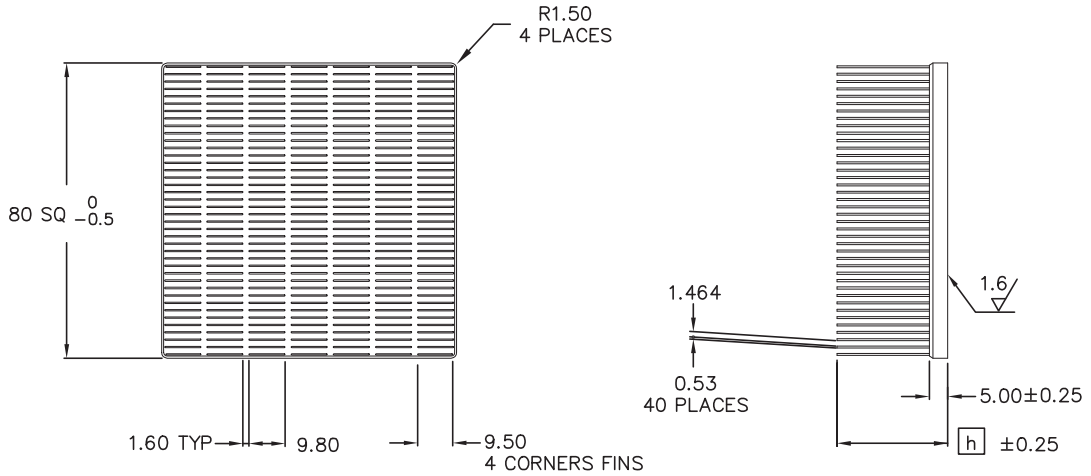

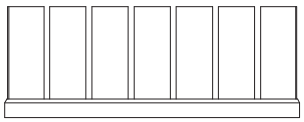

HEAT SINK
MATERIAL : A 6063
FINISH : BLACK ANODIZE

MODEL	HEIGHT h	WEIGHT (grams)
UB80−15B	15	120.8
UB80−20B	20	137.2
UB80−25B	25	153.6
UB80−30B	30	170.0

Dimensions : mm

DATA

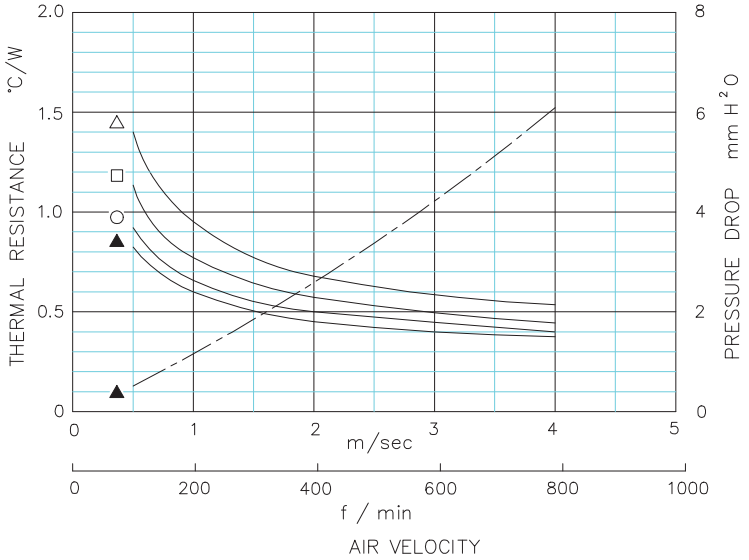

● Thermal Resistance (Ducted)
(Solid Line ———)
● Pressure Drop
(Center Line —·—)

△ UB80−15B
□ UB80−20B
○ UB80−25B
▲ UB80−30B

■ Based on Alpha's Standard Test Procedure. (Refer to page marked Technical Information.)
Dummy Heater Size : □12.7(mm)

Alpha Company Ltd.
256−1 UEDA,NUMAZU−CITY SHIZUOKA−PREF.,JAPAN
PHONE +81(55)966 0789
FAX +81(55)966 9192
E mail : alpha@micforg.co.jp
URL : http://www.micforg.co.jp

Alpha Novatech, Inc. − a subsidiary of Alpha Company.
473 Sapena Ct. #12 Santa Clara, CA 95054 USA
PHONE +1(408)567−8082
FAX +1(408)567−8053
E mail : sales@alphanovatech.com
URL : http://www.alphanovatech.com

ALPHA Low Pressure Drop and Low Thermal Resistance Heat Sink UB90

DIM

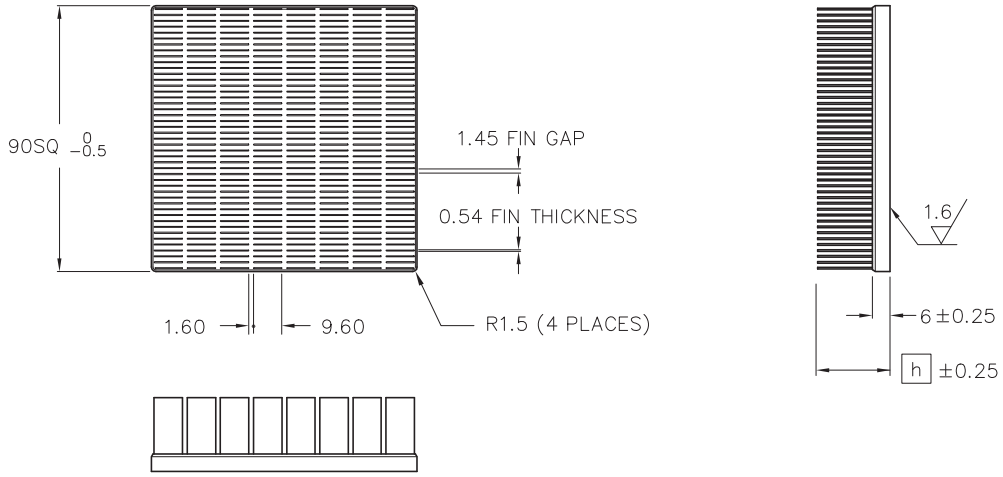

MODEL	HEIGHT h	WEIGHT (grams)
UB90−15B	15	175
UB90−20B	20	199
UB90−25B	25	223
UB90−30B	30	247

Dimensions : mm

HEAT SINK
MATERIAL : A 6063
FINISH : BLACK ANODIZE

DATA

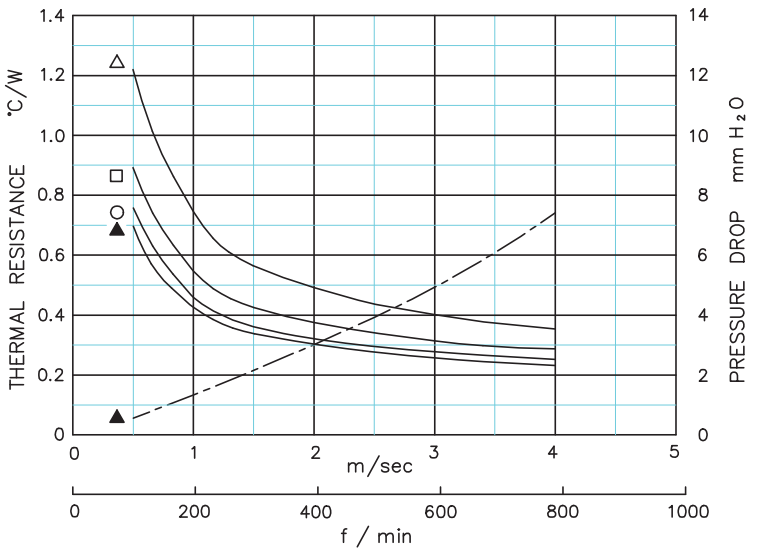

AIR VELOCITY: DUCTED CONDITION

● DUCTED CONDITION
DUMMY HEATER SIZE: 25 SQ
THERMAL RESISTANCE ————
PRESURE DROP —— - ——

■ BASED ON ALPHA'S STANDARD TEST PROCEDURE.
REFER TO TECHNICAL INFORMATION.

Alpha Company Ltd.
256−1 UEDA,NUMAZU−CITY SHIZUOKA−PREF.,JAPAN
PHONE +81(55)966 0789
FAX +81(55)966 9192
E mail : alpha@micforg.co.jp
URL : http://www.micforg.co.jp

Alpha Novatech, Inc. − a subsidiary of Alpha Company.
473 Sapena Ct. #12 Santa Clara, CA 95054 USA
PHONE +1(408)567−8082
FAX +1(408)567−8053
E mail : sales@alphanovatech.com
URL : http://www.alphanovatech.com

ALPHA Low Pressure Drop and Low Thermal Resistance Heat Sink UB100

DIM

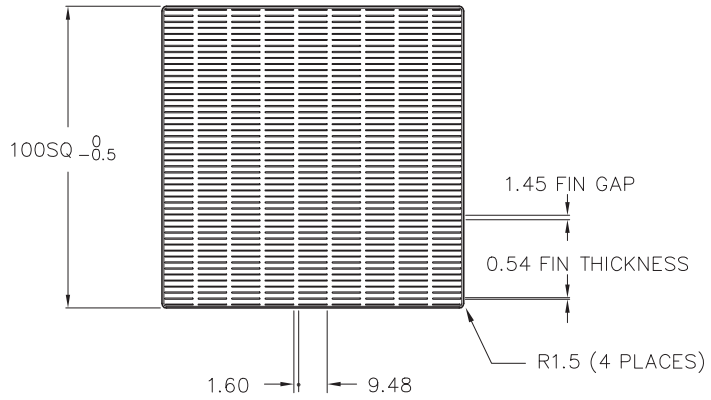

HEAT SINK
MATERIAL : A 6063
FINISH : BLACK ANODIZE

MODEL	HEIGHT [h]	WEIGHT (grams)
UB100−15B	15	160.6
UB100−20B	20	198.3
UB100−25B	25	236.0
UB100−30B	30	273.8

Dimensions : mm

DATA

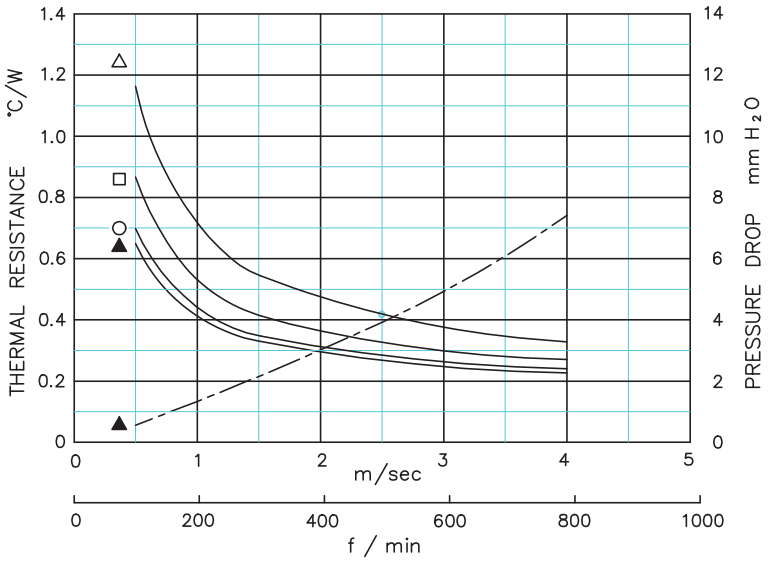

△ UB100−15B
□ UB100−20B
○ UB100−25B
▲ UB100−30B

DUCTED CONDITION
DUMMY HEATER SIZE: 25 SQ
THERMAL RESISTANCE ——————
PRESURE DROP —— - ——

AIR VELOCITY: DUCTED CONDITION

BASED ON ALPHA'S STANDARD TEST PROCEDURE.
REFER TO TECHNICAL INFORMATION.

Alpha Company Ltd.
256−1 UEDA,NUMAZU−CITY SHIZUOKA−PREF.,JAPAN
PHONE +81(55)966 0789
FAX +81(55)966 9192
E mail : alpha@micforg.co.jp
URL : http://www.micforg.co.jp

Alpha Novatech, Inc. − a subsidiary of Alpha Company.
473 Sapena Ct. #12 Santa Clara, CA 95054 USA
PHONE +1(408)567−8082
FAX +1(408)567−8053
E mail : sales@alphanovatech.com
URL : http://www.alphanovatech.com

ALPHA Low Pressure Drop and Low Thermal Resistance Heat Sink UB12060

DIM

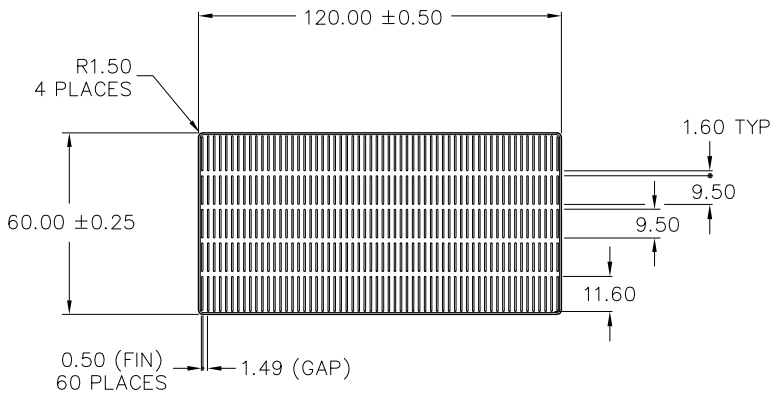

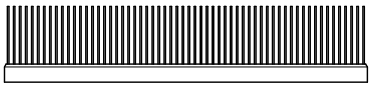

HEAT SINK
MATERIAL : A 6063
FINISH : BLACK ANODIZE

MODEL	HEIGHT h	WEIGHT (grams)
UB12060−15B	15	153.1
UB12060−20B	20	173.8
UB12060−25B	25	194.4
UB12060−30B	30	215.1

Dimensions mm

DATA

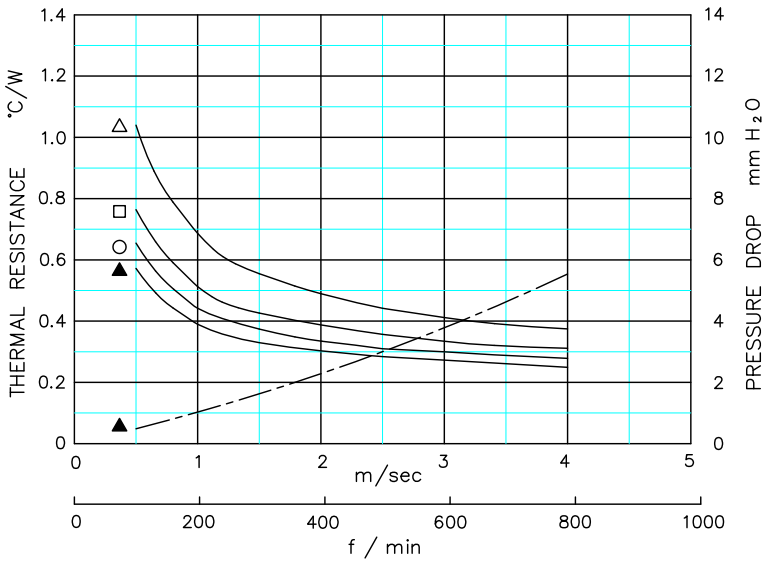

△ UB12060−15B
□ UB12060−20B
○ UB12060−25B
▲ UB12060−30B

DUCTED CONDITION
DUMMY HEATER SIZE: 25 SQ
THERMAL RESISTANCE ——————
PRESURE DROP —— - ——

AIR VELOCITY: DUCTED CONDITION

BASED ON ALPHA'S STANDARD TEST PROCEDURE.
REFER TO TECHNICAL INFORMATION.

Alpha Company Ltd.
256−1 UEDA,NUMAZU−CITY SHIZUOKA−PREF.,JAPAN
PHONE +81(55)966 0789
FAX +81(55)966 9192
E mail : alpha@micforg.co.jp
URL : http://www.micforg.co.jp

Alpha Novatech, Inc. − a subsidiary of Alpha Company.
473 Sapena Ct. #12 Santa Clara, CA 95054 USA
PHONE +1(408)567−8082
FAX +1(408)567−8053
E mail : sales@alphanovatech.com
URL : http://www.alphanovatech.com

ALPHA Low Pressure Drop and Low Thermal Resistance Heat Sink UB13070

DIM

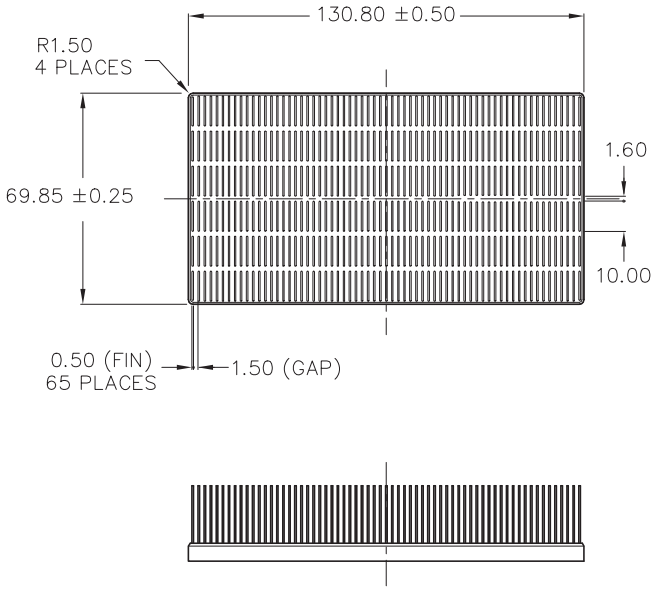

HEAT SINK
MATERIAL : A 6063
FINISH : BLACK ANODIZE

MODEL	HEIGHT [h]	WEIGHT (grams)
UB13070−15B	15.0	192.8
UB13070−20B	20.0	218.2
UB13070−25B	25.0	223.6
UB13070−30B	30.0	269.0

Dimensions : mm

DATA

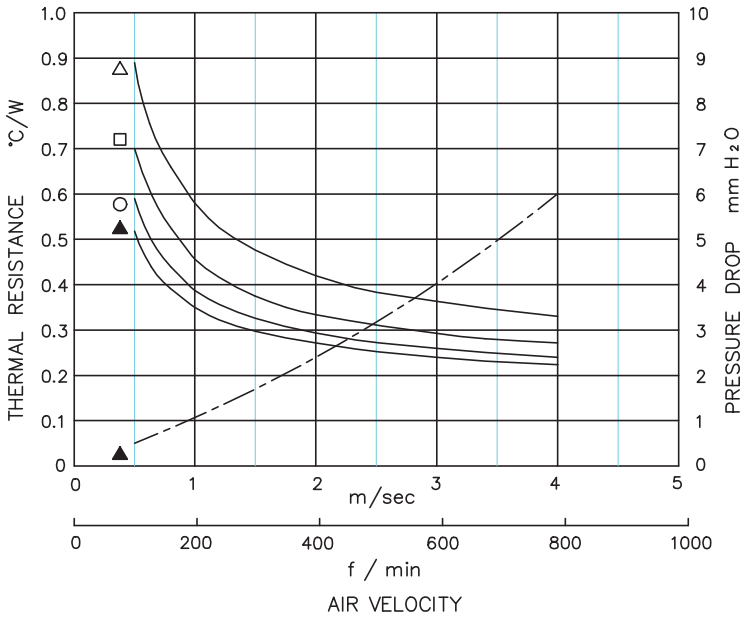

● Thermal Resistance (Ducted)
(Solid Line ———)
● Pressure Drop
(Center Line —·—)

△ UB13070−15B
□ UB13070−20B
○ UB13070−25B
▲ UB13070−30B

■ Based on Alpha's Standard Test Procedure. (Refer to page marked Technical Information.)
Dummy Heater Size : 25.0SQ mm

Alpha Company Ltd.
256−1 UEDA,NUMAZU−CITY SHIZUOKA−PREF.,JAPAN
PHONE +81(55)966 0789
FAX +81(55)966 9192
E mail : alpha@micforg.co.jp
URL : http://www.micforg.co.jp

Alpha Novatech, Inc. − a subsidiary of Alpha Company.
473 Sapena Ct. #12 Santa Clara, CA 95054 USA
PHONE +1(408)567−8082
FAX +1(408)567−8053
E mail : sales@alphanovatech.com
URL : http://www.alphanovatech.com