| REVISIONS | | | | |
|---|---|---|---|---|
| REV | DATE | DESCRIPTION | CHG | APPR |

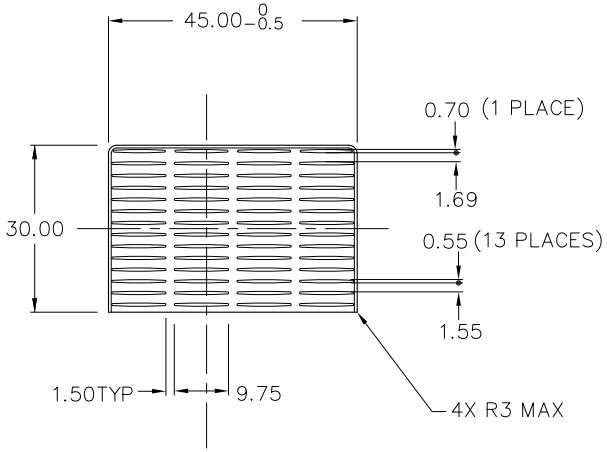


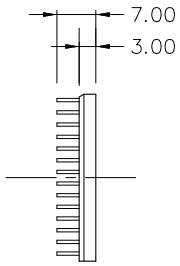


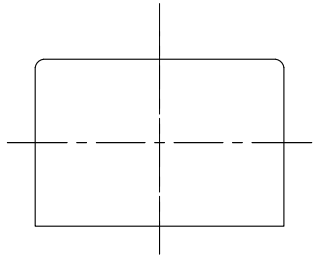

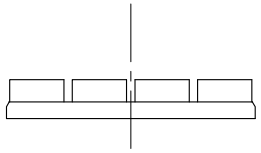

NOTES : UNLESS OTHERWISE SPECIFIED
1. INTERPRET DIMENSIONS AND TOLERANCES PER ANSI Y14.5M.
2. ALL DIMENSIONS ARE IN MILLIMETERS.
3. MATERIAL : ALUMINUM 6063
4. FINISH : NONE
5. TOLERANCES :
   .XX ±0.254
   .XXX ±0.127
   ANGLES ± 1°
6. REMOVE ALL BURRS AND BREAK SHARP EDGES. UNSPECIFIED CORNER R0.5 MAX OR C0.5 MAX.
7. A BEND OF THE FIN: THE FINS MUST NOT CONTACT.
8. Based on Alpha Standard heat sink UB45-8B

| ITEM | PART NO. | PART NAME | REMARK | Q'TY |
|---|---|---|---|---|
| ALPHA CO.,LTD. | | | CSTMR'S PART NO. | |
| | | MATERIAL NOTE 3,4 | NAME UB3045-7NM-623 | |
| SCALE 1 : 1 | | APPR & CHCK A.JONES | PART NO. & DWG NO. S08CDY04 | REV |
| DATE MAR 04, 2016 | | DSGN & DWG A.JONES | RDCTN: | LOFF: |

A3