01_Revision_History.SchDoc

Index

Page	Schematics Page Name
01	Cover Sheet / Revision History
02	Top Level
03	
04	
05	
06	
07	
08	
09	
10	

Revision History

Rev.	Rel.	Date	Author	Description	Page(s)
1.0	RC00	2021-04	GW	- Initial design	

Evalboard_Base_v1.1

Default_Assembly

1.11

Infineon Technologies AG
GIP GCO CD AM
Siemensstraße 2, 9500 Villach, Austria

04/2024

U_02_Top_Level
02_Top_Level.SchDoc

LEGAL DISCLAIMER
THE INFORMATION GIVEN IN THIS DOCUMENT IS GIVEN FOR ILLUSTRATING PURPOSES ONLY. THE RECIPIENT OF THIS DOCUMENT MUST VERIFY ANY FUNCTION DESCRIBED HEREIN IN THE REAL APPLICATION. INFINEON TECHNOLOGIES HEREBY DISCLAIMS ANY AND ALL WARRANTIES AND LIABILITIES OF ANY KIND (INCLUDING WITHOUT LIMITATION WARRANTIES OF NON-INFRINGEMENT OF INTELLECTUAL PROPERTY RIGHTS OF ANY THIRD PARTY) WITH RESPECT TO ANY AND ALL INFORMATION GIVEN IN THIS DOCUMENT.

Infineon Technologies AG
GIP GCO CD AM
Siemensstraße 2, 9500 Villach, Austria

Title	Evalboard_Base_v1.1		
Variant	Default_Assembly	Approved	<Appr.>
Size: A3	Document Name: 01_Revision_History.SchDoc	Rel.	Rev. 1.11
Date: 26.09.2024	Time: 10:03:14	Author: HG	Sheet of

© Infineon Technologies AG 2022. All Rights Reserved.

02_Top_Level.SchDoc

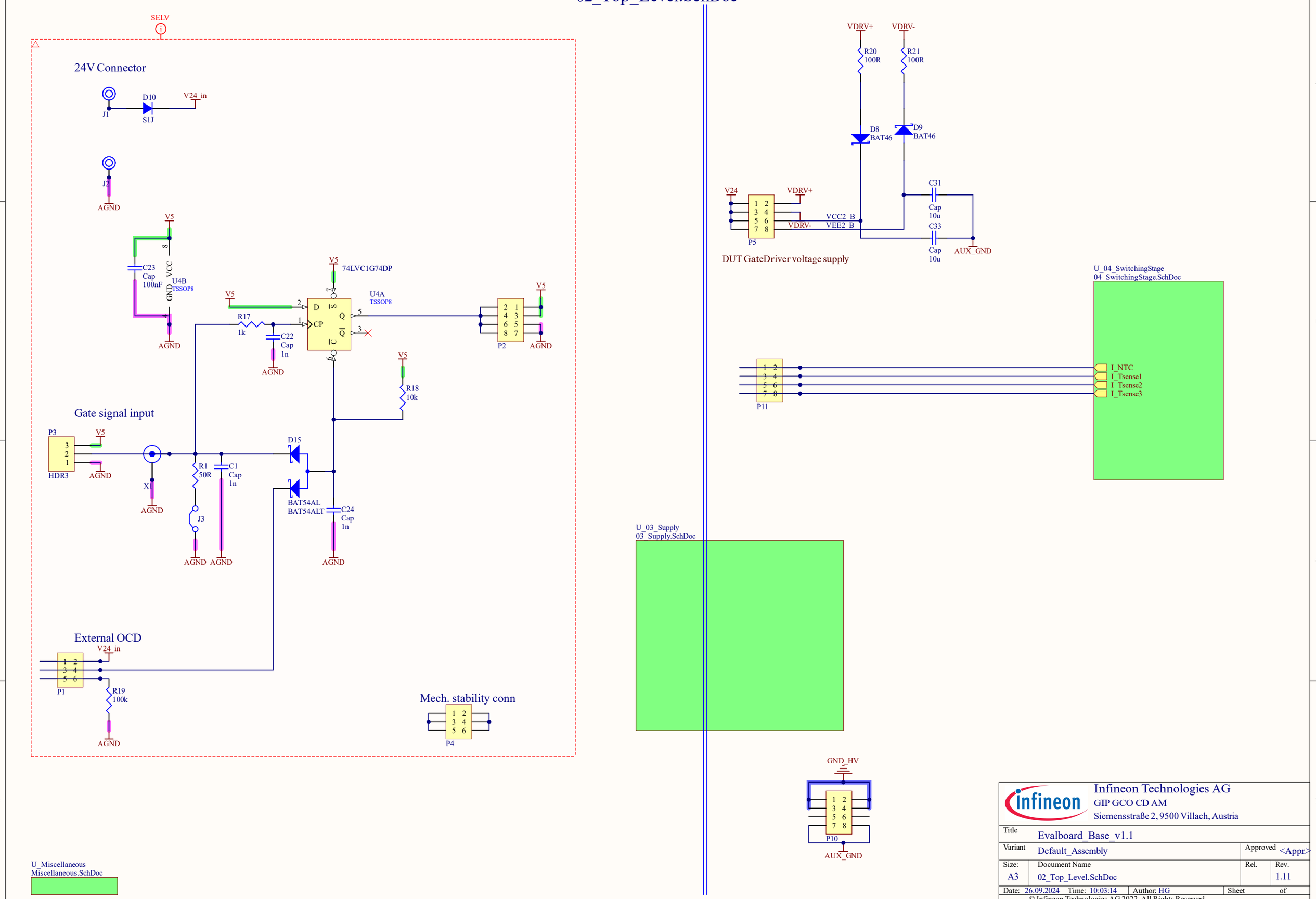

Infineon Technologies AG
GIP GCO CD AM
Siemensstraße 2, 9500 Villach, Austria

Title	Evalboard_Base_v1.1		
Variant	Default_Assembly	Approved	<Appr.>
Size: A3	Document Name 02_Top_Level.SchDoc	Rel.	Rev. 1.11
Date: 26.09.2024	Time: 10:03:14	Author: HG	Sheet of

© Infineon Technologies AG 2022. All Rights Reserved.

03_Supply.SchDoc

SELV

24V-->5V LDO

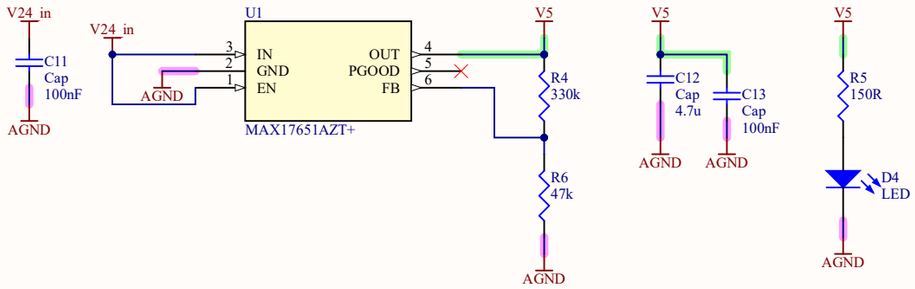

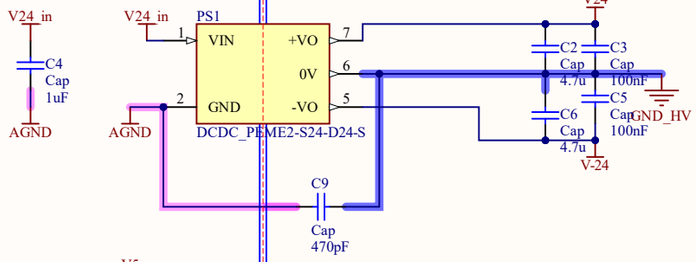

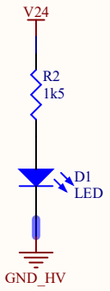

2.6V Preregulator for JFET

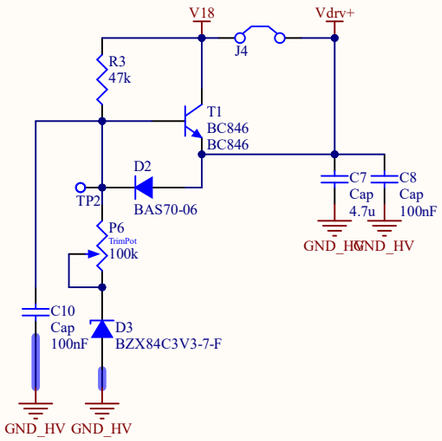

24V-->18V LDO

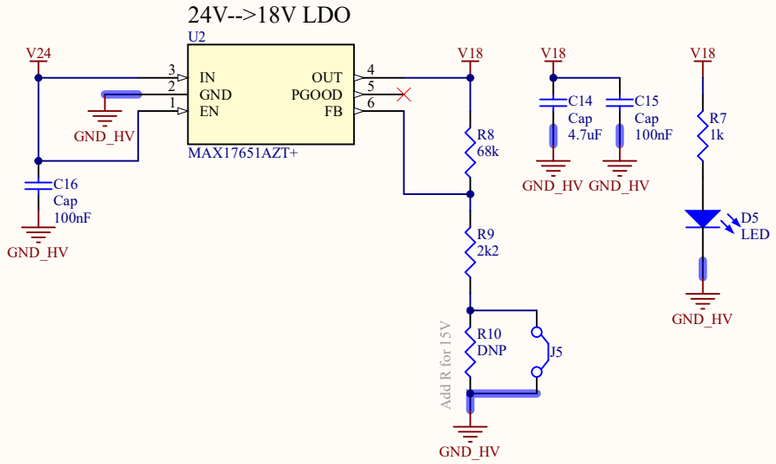

-24V--> var. neg. volt. LDO

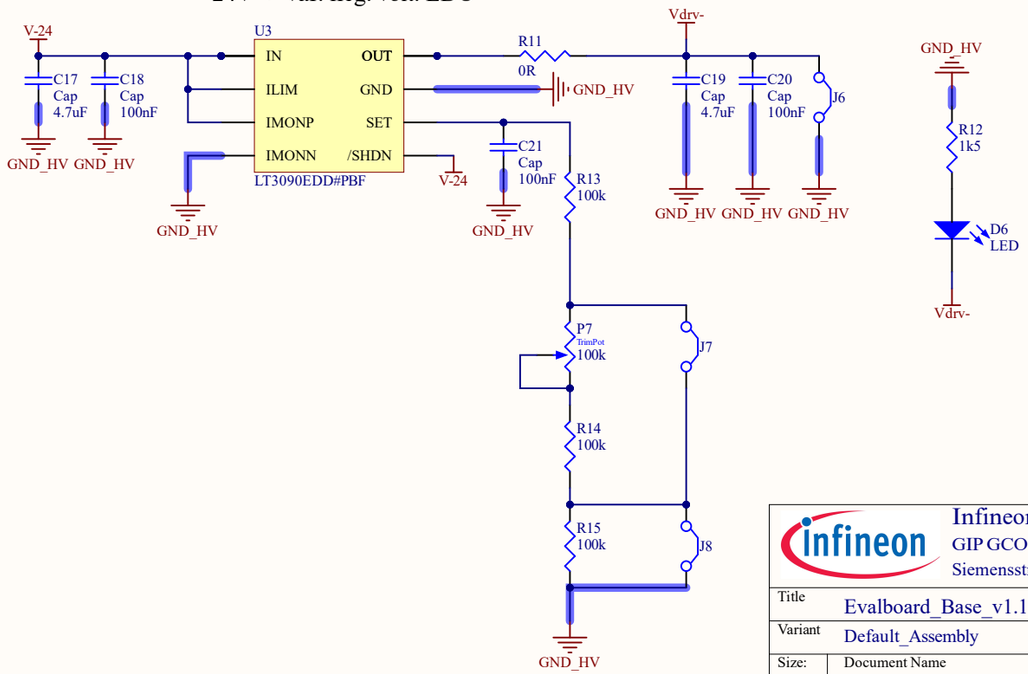

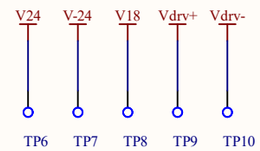

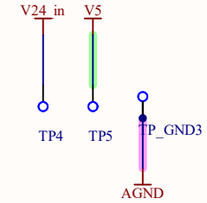

Infineon Technologies AG GIP GCO CD AM Siemensstraße 2, 9500 Villach, Austria			
Title	Evalboard_Base_v1.1		
Variant	Default_Assembly	Approved	<Appr.>
Size: A3	Document Name: 03_Supply.SchDoc	Rel.	Rev. 1.11
Date: 26.09.2024	Time: 10:03:14	Author: HG	Sheet of

© Infineon Technologies AG 2022. All Rights Reserved.

04_SwitchingStage.SchDoc

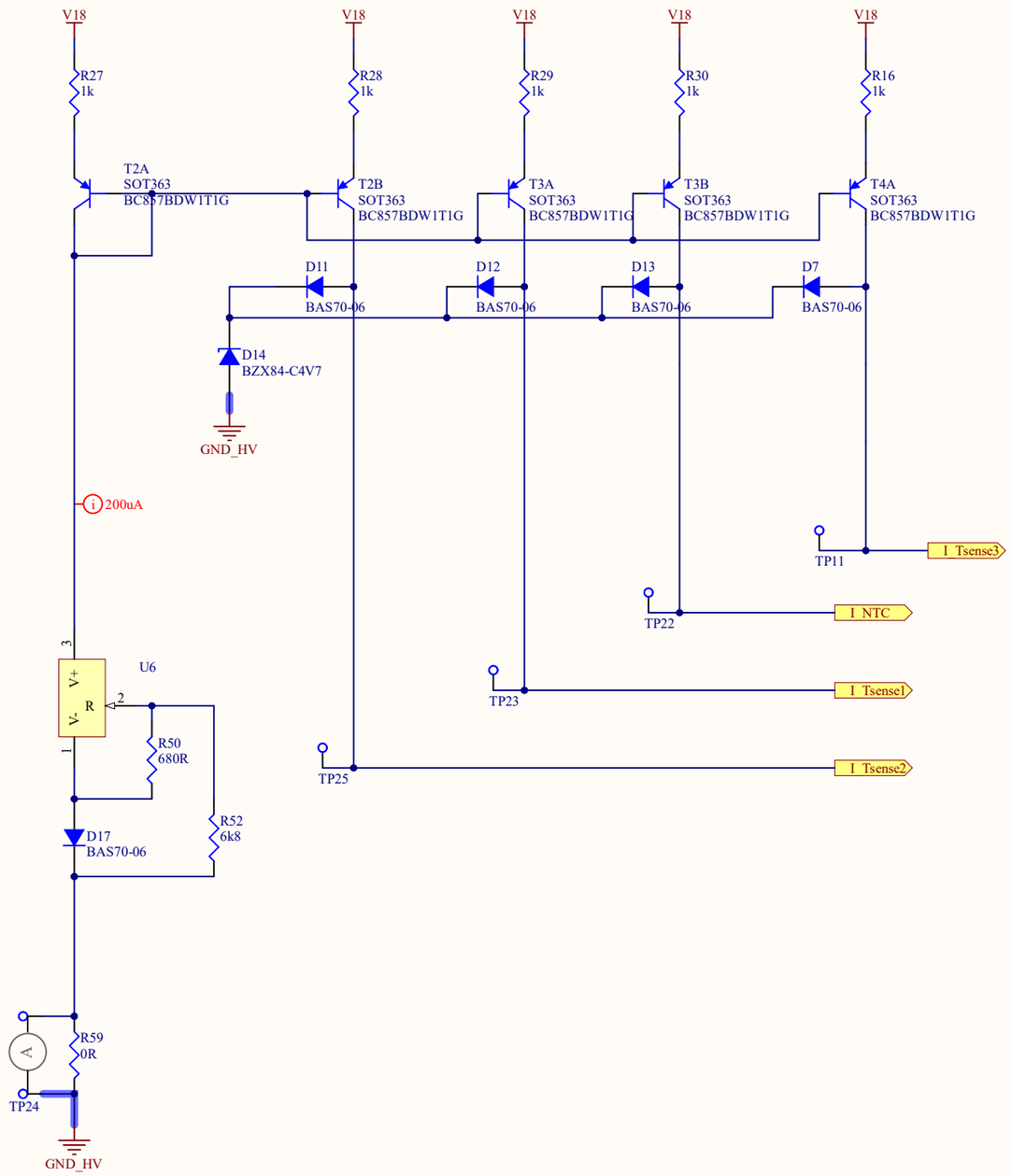

Infineon Technologies AG GIP GCO CD AM Siemensstraße 2, 9500 Villach, Austria		
Title	Evalboard_Base_v1.1	
Variant	Default_Assembly	Approved <Appr.>
Size: A3	Document Name: 04_SwitchingStage.SchDoc	Rel. / Rev. 1.11
Date: 26.09.2024	Time: 10:03:15	Author: HG / Sheet / of

© Infineon Technologies AG 2022. All Rights Reserved.

Miscellaneous.SchDoc



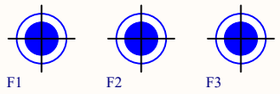

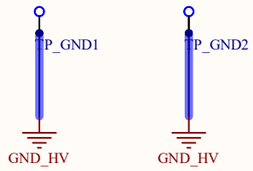

Infineon Technologies AG
GIP GCO CD AM
Siemensstraße 2, 9500 Villach, Austria

Title	Evalboard_Base_v1.1		
Variant	Default_Assembly	Approved	<Appr.>
Size: A3	Document Name: Miscellaneous.SchDoc	Rel.	Rev. 1.11
Date: 26.09.2024	Time: 10:03:15	Author: HG	Sheet of

© Infineon Technologies AG 2022. All Rights Reserved.

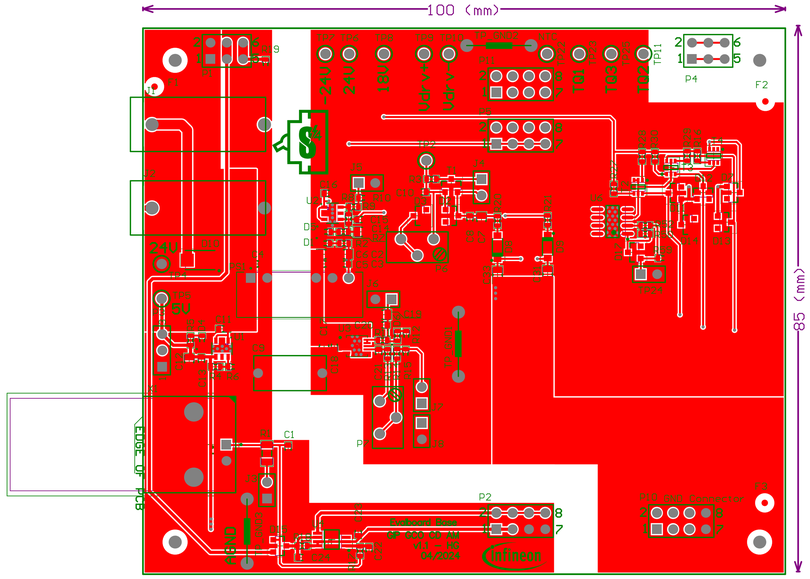

Layer	Name	Material	Thickness
	Top Overlay		
	Top Solder	Solder Resist	0,79mil
1	L1_Top		2,76mil
	Dielectric 2	PP-006	2,80mil
	Core	FR-4	61,02mil
	Dielectric 1	PP-006	2,80mil
2	L14_Bot		2,76mil
	Bottom Solder	Solder Resist	0,79mil
	Bottom Overlay		

Infineon Technologies AG
GP GCO CD AM
Siemensstrasse 2
9500 VILLACH – AUSTRIA

ENGINEER:		TITLE:	
PCB DESIGNER: HG		Evalboard_Base_v1.1	
DATE: 26.09.2024	PART NO.:	REL: <Rel>	REV: <Rev.>
SVN REVISION: Not in version control	FILE NAME: Evalboard_Base_v1.1.PcbDoc	APRV: <Appr.>	SCALE: 1:1

C . Infineon Technologies AG 2022. All Rights Reserved.



Layer	Name	Material	Thickness
	Top Overlay		
	Top Solder	Solder Resist	0,79mil
1	L1_Top		2,76mil
	Dielectric 2	PP-006	2,80mil
	Core	FR-4	61,02mil
	Dielectric 1	PP-006	2,80mil
2	L14_Bot		2,76mil
	Bottom Solder	Solder Resist	0,79mil
	Bottom Overlay		

Infineon Technologies AG
GP GCO CD AM
Siemensstrasse 2
9500 VILLACH – AUSTRIA

ENGINEER:	TITLE:		
PCB DESIGNER: HG	Evalboard_Base_v1.1		
DATE: 26.09.2024	PART NO.:	REL: <Rel>	REV: <Rev.>
SVN REVISION: Not in version control	FILE NAME: Evalboard_Base_v1.1.PcbDoc	APRV: <Appr.>	SCALE: 1:1

© Infineon Technologies AG 2022. All Rights Reserved.



Layer	Name	Material	Thickness
	Top Overlay		
	Top Solder	Solder Resist	0,79mil
1	L1_Top		2,76mil
	Dielectric 2	PP-006	2,80mil
	Core	FR-4	61,02mil
	Dielectric 1	PP-006	2,80mil
2	L14_Bot		2,76mil
	Bottom Solder	Solder Resist	0,79mil
	Bottom Overlay		

Infineon Technologies AG
GP GCO CD AM
Siemensstrasse 2
9500 VILLACH – AUSTRIA

ENGINEER:	TITLE:		
PCB DESIGNER: HG	Evalboard_Base_v1.1		
DATE: 26.09.2024	PART NO.:	REL: <Rel>	REV: <Rev.>
SVN REVISION: Not in version control	FILE NAME: Evalboard_Base_v1.1.PcbDoc	APRV: <Appr.>	SCALE: 1:1

© Infineon Technologies AG 2022. All Rights Reserved.

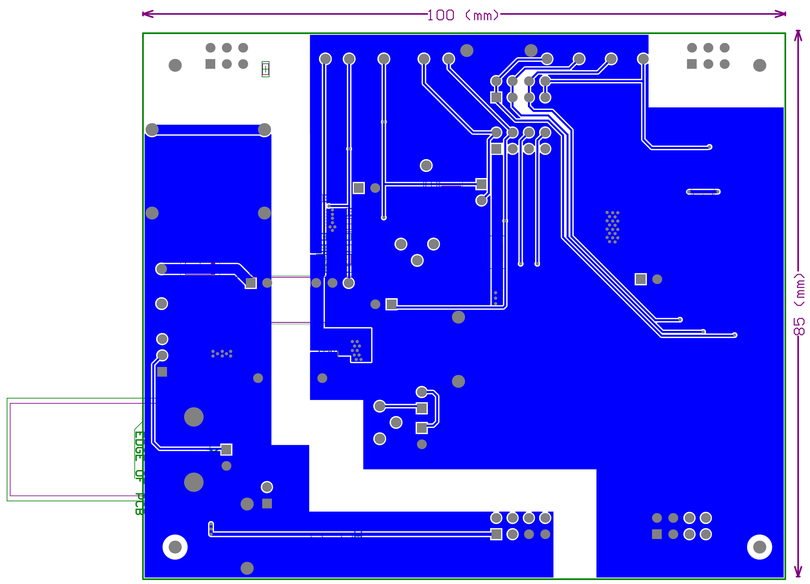

Layer	Name	Material	Thickness
	Top Overlay		
	Top Solder	Solder Resist	0,79mil
1	L1_Top		2,76mil
	Dielectric 2	PP-006	2,80mil
	Core	FR-4	61,02mil
	Dielectric 1	PP-006	2,80mil
2	L14_Bot		2,76mil
	Bottom Solder	Solder Resist	0,79mil
	Bottom Overlay		

Infineon Technologies AG
GP GCO CD AM
Siemensstrasse 2
9500 VILLACH – AUSTRIA

ENGINEER:	TITLE:
PCB DESIGNER: HG	Evalboard_Base_v1.1
DATE: 26.09.2024	PART NO.:
SVN REVISION: Not in version control	FILE NAME: Evalboard_Base_v1.1.PcbDoc

REL:	REV:
<Rel>	<Rev.>
APRV:	SCALE:
<Appr.>	1:1

C . Infineon Technologies AG 2022. All Rights Reserved.

Infineon Technologies AG
GP GCO CD AM
Siemensstrasse 2
9500 VILLACH – AUSTRIA

ENGINEER:		TITLE:	
PCB DESIGNER: HG		Evalboard_Base_v1.1	
DATE: 26.09.2024	PART NO.:	REL: <Rel>	REV: <Rev.>
SVN REVISION: Not in version control	FILE NAME: Evalboard_Base_v1.1.PcbDoc	APRV: <Appr.>	SCALE: 1:1

C . Infineon Technologies AG 2022. All Rights Reserved.

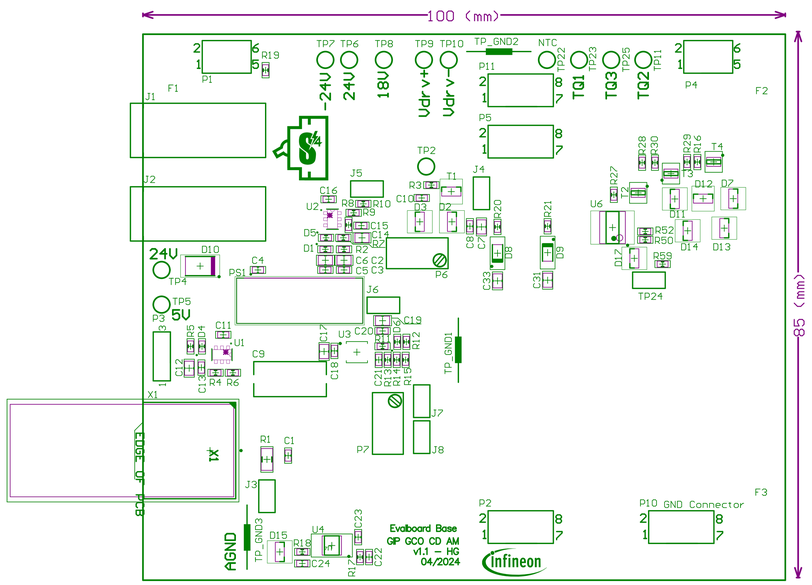

Layer	Name	Material	Thickness
	Top Overlay		
	Top Solder	Solder Resist	0,79mil
1	L1_Top		2,76mil
	Dielectric 2	PP-006	2,80mil
	Core	FR-4	61,02mil
	Dielectric 1	PP-006	2,80mil
2	L14_Bot		2,76mil
	Bottom Solder	Solder Resist	0,79mil
	Bottom Overlay		

Infineon Technologies AG GP GCO CD AM Siemensstrasse 2 9500 VILLACH – AUSTRIA	ENGINEER:	TITLE:	
	PCB DESIGNER: HG	Evalboard_Base_v1.1	
	DATE: 26.09.2024	PART NO.:	REL: <Rel> / REV: <Rev.>
	SVN REVISION: Not in version control	FILE NAME: Evalboard_Base_v1.1.PcbDoc	APRV: <Appr.> / SCALE: 1:1

C . Infineon Technologies AG 2022. All Rights Reserved.

Infineon Technologies AG
GP GCO CD AM
Siemensstrasse 2
9500 VILLACH – AUSTRIA

ENGINEER:
PCB DESIGNER:
HG
TITLE:
Evalboard_Base_v1.1
DATE:
26.09.2024
PART NO.:
REL:
<Rel>
REV:
<Rev.>
SVN REVISION:
Not in version control
FILE NAME:
Evalboard_Base_v1.1.PcbDoc
APRV:
<Appr.>
SCALE:
1:1
C . Infineon Technologies AG 2022. All Rights Reserved.

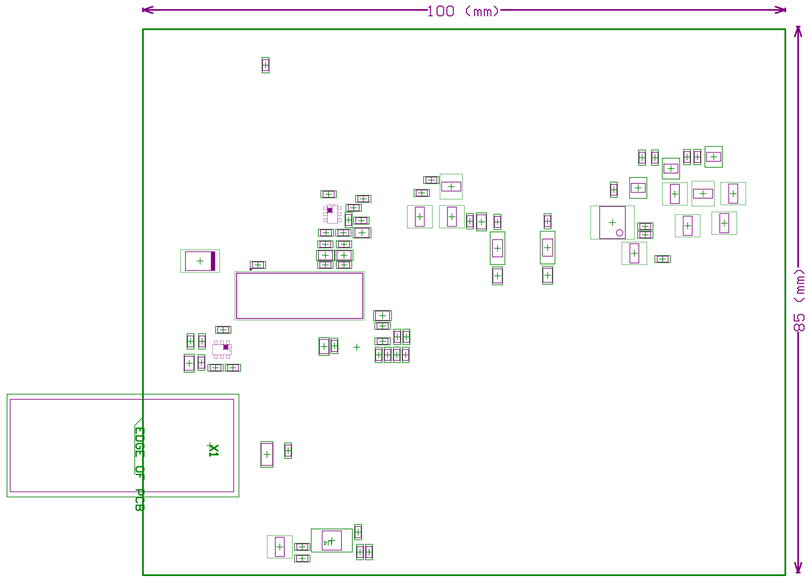

Layer	Name	Material	Thickness
	Top Overlay		
	Top Solder	Solder Resist	0,79mil
1	L1_Top		2,76mil
	Dielectric 2	PP-006	2,80mil
	Core	FR-4	61,02mil
	Dielectric 1	PP-006	2,80mil
2	L14_Bot		2,76mil
	Bottom Solder	Solder Resist	0,79mil
	Bottom Overlay		

Infineon Technologies AG
GP GCO CD AM
Siemensstrasse 2
9500 VILLACH – AUSTRIA

ENGINEER:		TITLE: Evalboard_Base_v1.1	
PCB DESIGNER: HG			
DATE: 26.09.2024	PART NO.:	REL: <Rel.>	REV: <Rev.>
SVN REVISION: Not in version control	FILE NAME: Evalboard_Base_v1.1.PcbDoc	APRV: <Appr.>	SCALE: 1:1

C . Infineon Technologies AG 2022. All Rights Reserved.

Infineon Technologies AG
GP GCO CD AM
Siemensstrasse 2
9500 VILLACH – AUSTRIA

ENGINEER:		TITLE: Evalboard_Base_v1.1	
PCB DESIGNER: HG			
DATE: 26.09.2024	PART NO.:	REL: <Rel.>	REV: <Rev.>
SVN REVISION: Not in version control	FILE NAME: Evalboard_Base_v1.1.PcbDoc	APRV: <Appr.>	SCALE: 1:1

C . Infineon Technologies AG 2022. All Rights Reserved.

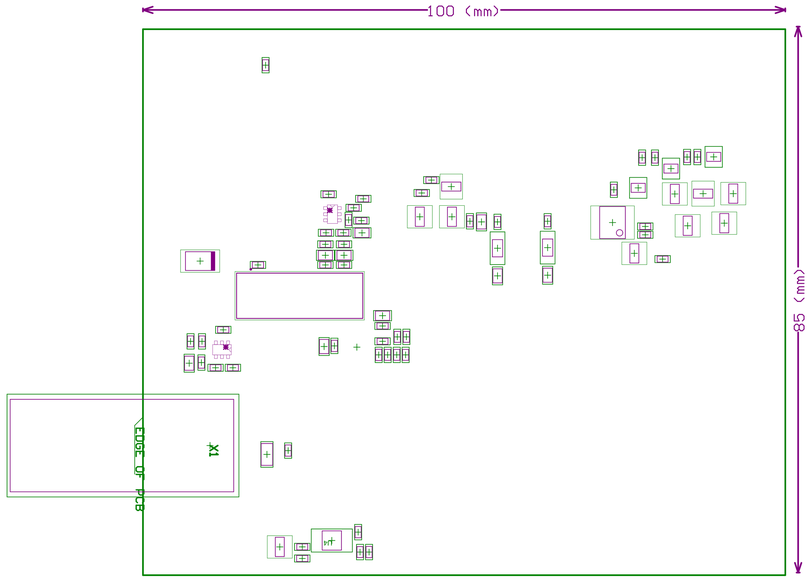

Layer	Name	Material	Thickness
	Top Overlay		
	Top Solder	Solder Resist	0,79mil
1	L1_Top		2,76mil
	Dielectric 2	PP-006	2,80mil
	Core	FR-4	61,02mil
	Dielectric 1	PP-006	2,80mil
2	L14_Bot		2,76mil
	Bottom Solder	Solder Resist	0,79mil
	Bottom Overlay		

Infineon Technologies AG
GP GCO CD AM
Siemensstrasse 2
9500 VILLACH – AUSTRIA

ENGINEER:	TITLE:
PCB DESIGNER: HG	Evalboard_Base_v1.1
DATE: 26.09.2024	PART NO.:
SVN REVISION: Not in version control	FILE NAME: Evalboard_Base_v1.1.PcbDoc

REL:	REV:
<Rel.>	<Rev.>
APRV:	SCALE:
<Appr.>	1:1

C . Infineon Technologies AG 2022. All Rights Reserved.

Infineon Technologies AG
GP GCO CD AM
Siemensstrasse 2
9500 VILLACH – AUSTRIA

ENGINEER:	TITLE:
PCB DESIGNER: HG	Evalboard_Base_v1.1
DATE: 26.09.2024	PART NO.:
SVN REVISION: Not in version control	FILE NAME: Evalboard_Base_v1.1.PcbDoc

REL:	REV:
<Rel.>	<Rev.>
APRV:	SCALE:
<Appr.>	1:1

C . Infineon Technologies AG 2022. All Rights Reserved.

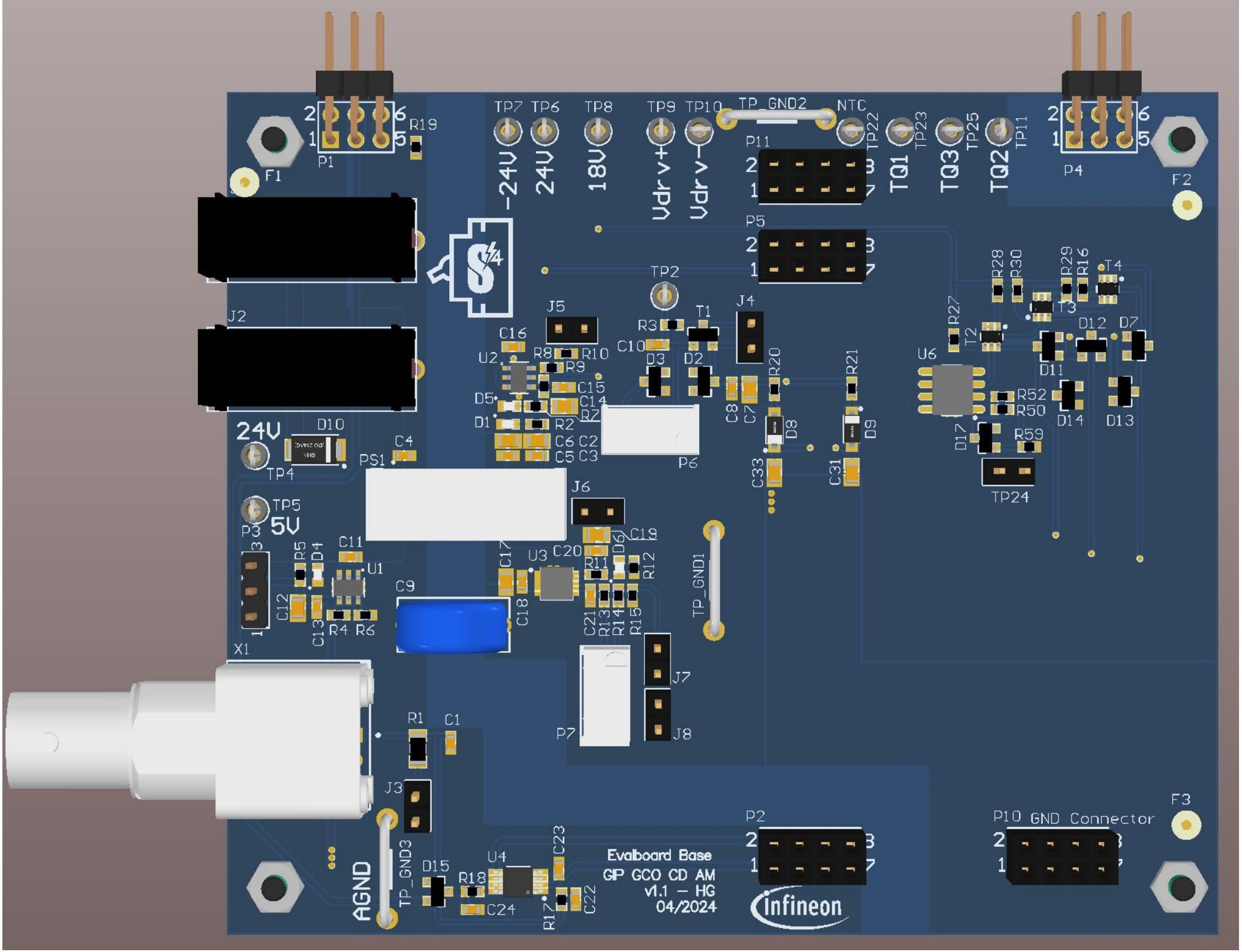

TP7
TP6
TP8
TP9
TP10
TP_GND2
NTC
TP22
TP23
TP25
TP11
-24V
24V
18V
Vdr v+
Vdr v-
TQ1
TQ3
TQ2
P1
P4
P11
P5
F1
F2
R19
J2
TP2
J5
J4
T1
R3
C10
C16
U2
R8
R10
R9
C15
C14
R7
D5
D1
R2
C6
C2
C5
C3
D3
D2
C8
C7
R20
R21
D8
D9
C33
C31
P6
R28
R30
R29
R16
T4
T3
R27
T2
D12
D7
D11
U6
R52
R50
D14
D13
D17
R59
TP24
24V
D10
TP4
PS1
C4
TP5
5V
P3
J6
C19
C20
D6
R11
R12
C17
U3
C18
C21
R13
R14
R15
TP_GND1
C11
R5
D4
U1
C12
C13
R4
R6
C9
X1
J7
J8
P7
R1
C1
J3
P2
P10 GND Connector
F3
AGND
TP_GND3
D15
R18
U4
C23
C24
R17
C22
Evalboard Base
GIP GCO CD AM
v1.1 – HG
04/2024
Infineon

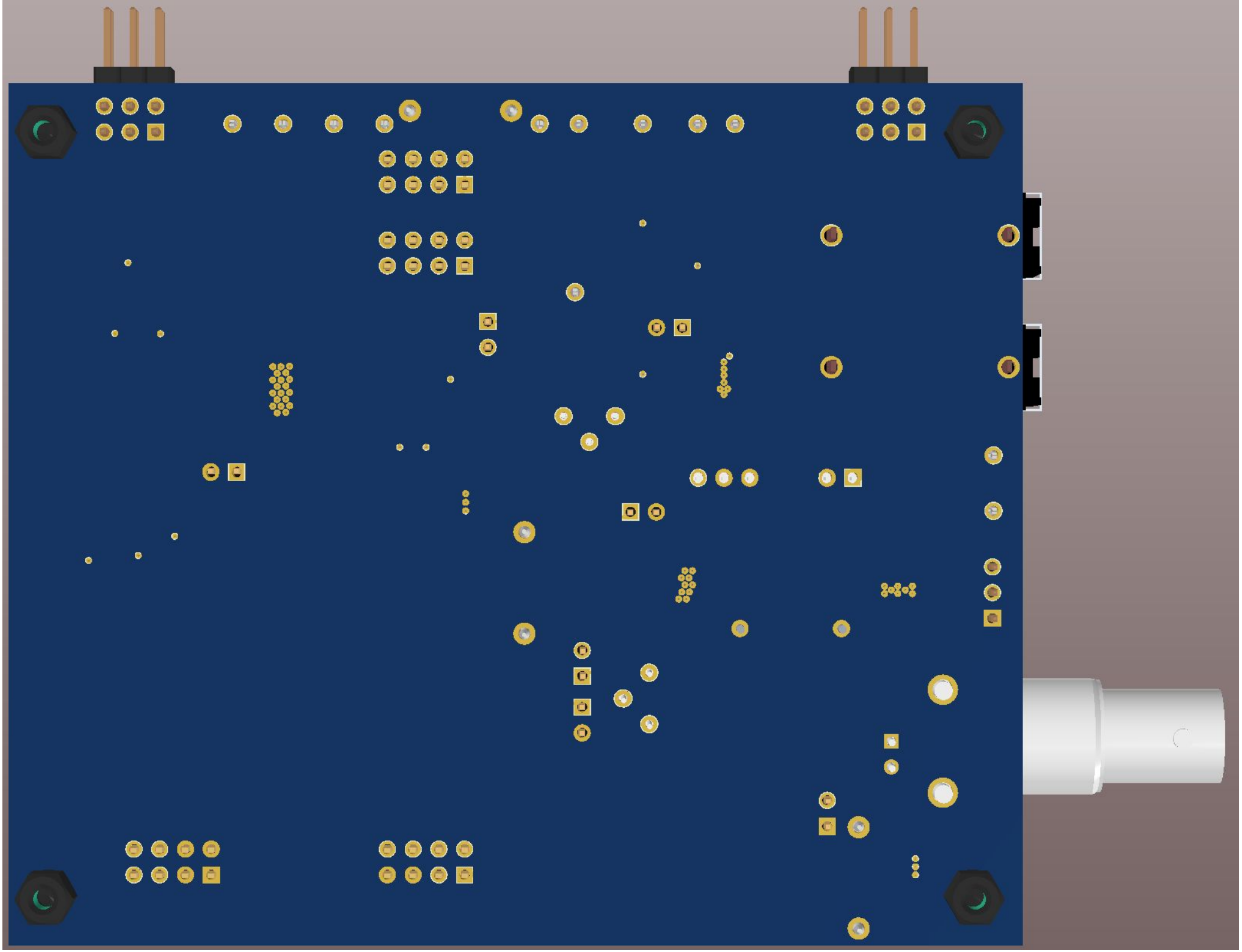

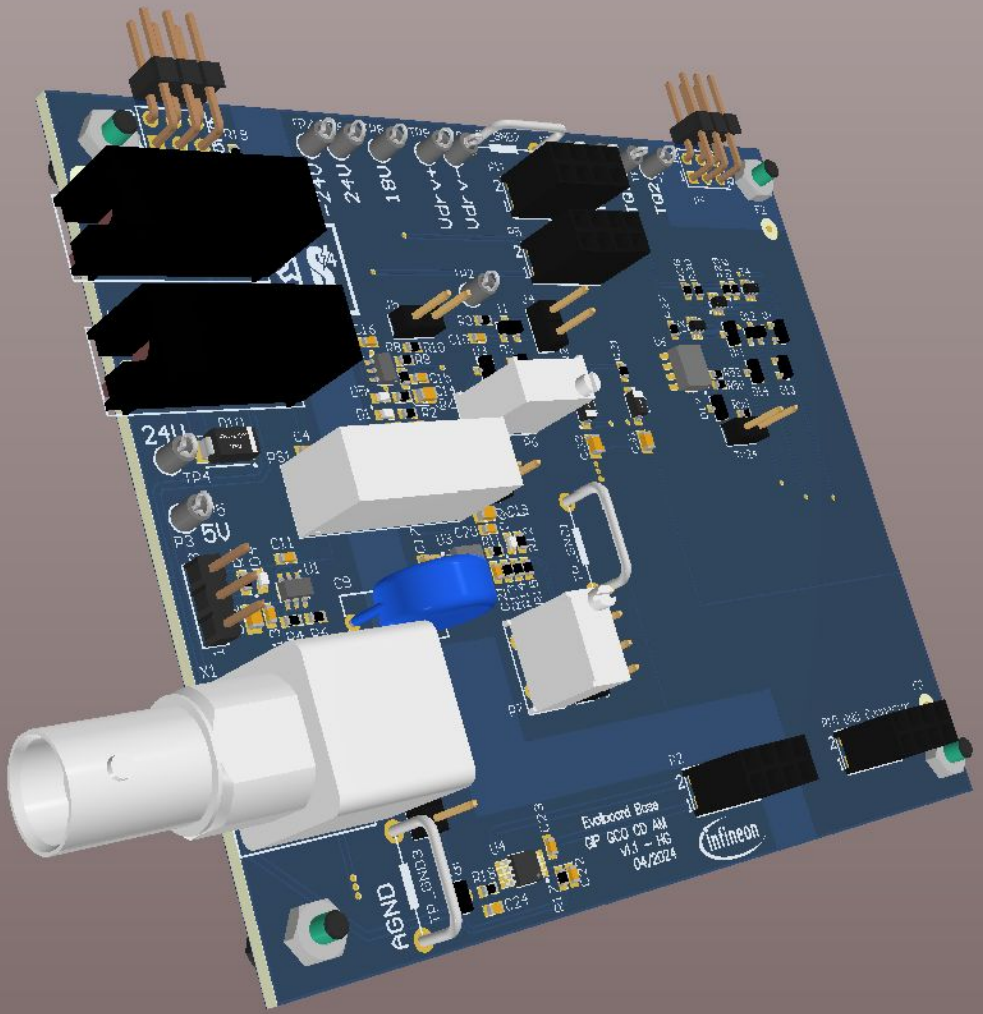
24V
18V
5V
AGND
Evalboard Base
CP GCO CD AM
V1.1 – HG
04/2024
Infineon