Solutions Guide
DC-DC Power Solutions for FPGAs

Infineon Power for FPGA of Xilinx / Zynq® Ultrascale+™ RFSoC

Power Macros for Zynq ® UltraScale+ ™ RFSoC

Infineon has several power solutions for the Zynq® UltraScale+ RFSoC family to scale from Zu21 to Zu29. These solutions show brief highlights & high level examples with an actual reference design with Xilinx on the ZCU111 . Infineon power soutions is used on the Zynq® UltraScale+™ RFSoC ZCU111 Evaluation Kit that enables designers to jumpstart RF-Class analog designs for wireless, cable access, early-warning(EW)/radar and other high-performance RF applications.

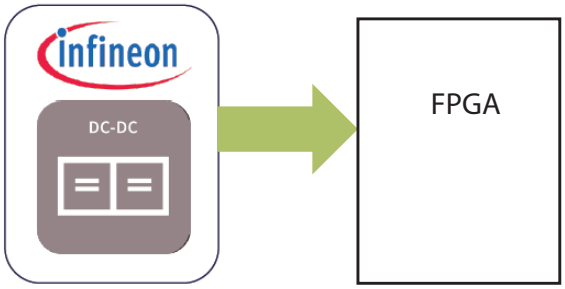

Highlights

> High level Infineon power maps for Zu21 to Zu29 Zynq UltraScale RFSoC Family from Xilinx
> Proven design on Xilinx reference design ZCU111 featuring Infineon's IRPS5401 PMICs
> Schematics, BOM, Layout and Performance Data Available from both Xilinx and Infineon
> Integrated voltage sequencing
> Tight board space design for small form factor applications

Power Consolidation - Zynq UltraScale+ RFSoC Solutions:

Figure 1 depicts recommended consolidation of power rails for the Zynq US+ RFSoC from Xilinx. In this use case, the core voltage rails for the PL and PS domain are separated and can run optionally at two different voltages to reduce power: 0.72V and 0.85V/0.9V. This scheme allow for power rail consolidation for power always on modes. Infineon offers several approaches for scalable power for the Zu21 to the Zu29.

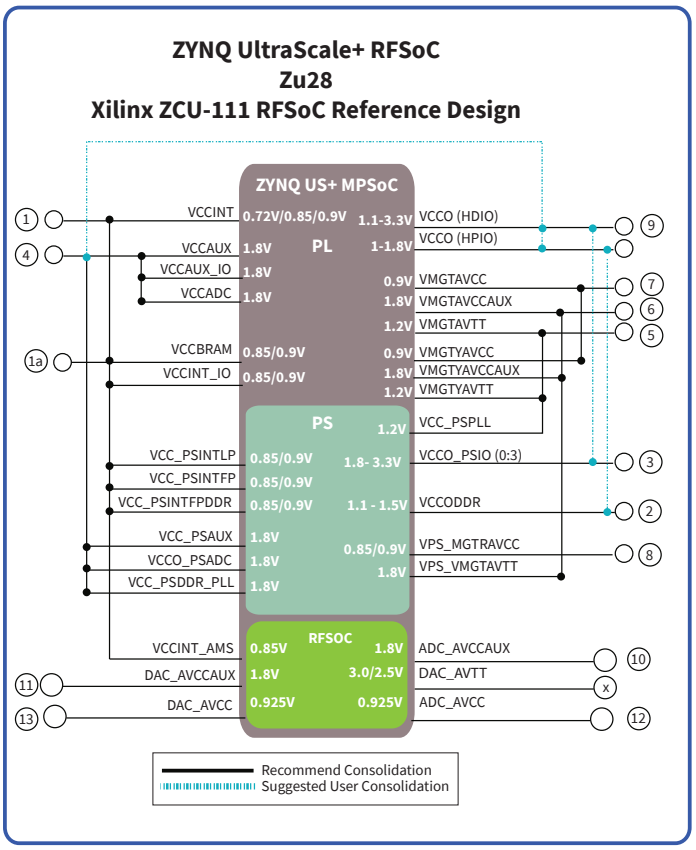

Figure 1: Xilinx' recommended power rail consolidation

DC-DC Power Solutions for FPGAs

Infineon Power Map Solutions for Zynq UltraScale+ RFSoC: Zu21 to Zu29

Infineon's power for Zynq UltraScale+ RFSoC is partitioned to allow for modular power design for tight board space for applications for either space optimized needs (Figure 2), power efficiency needs (Figure 3). Figure 4 shows an actually power implementation for space efficiency on the Xilinx ZCU111 Zynq UltraScale+ RFSoC reference design evaluation kit.

Highlights of Infineon's space optimized solution (Figure 2):

> Power solution optimized with minimum number of voltage rails to Xilinx power optimization recommendations

> Power solution offers scalable power for Zu21 to Zu29 using a single IRPS5401 PMIC plus external power stage for the Vcore from 30A to 50A

> Power solution offers low noise voltage rails for SERDES for compact space implementation with a single PMIC for minimum lane set

> Power solution offers integrated sequencing between the IRPS5401 PMICs using internal timing delays adjustable via I2C/PMBus for setting from 0ms to 127ms

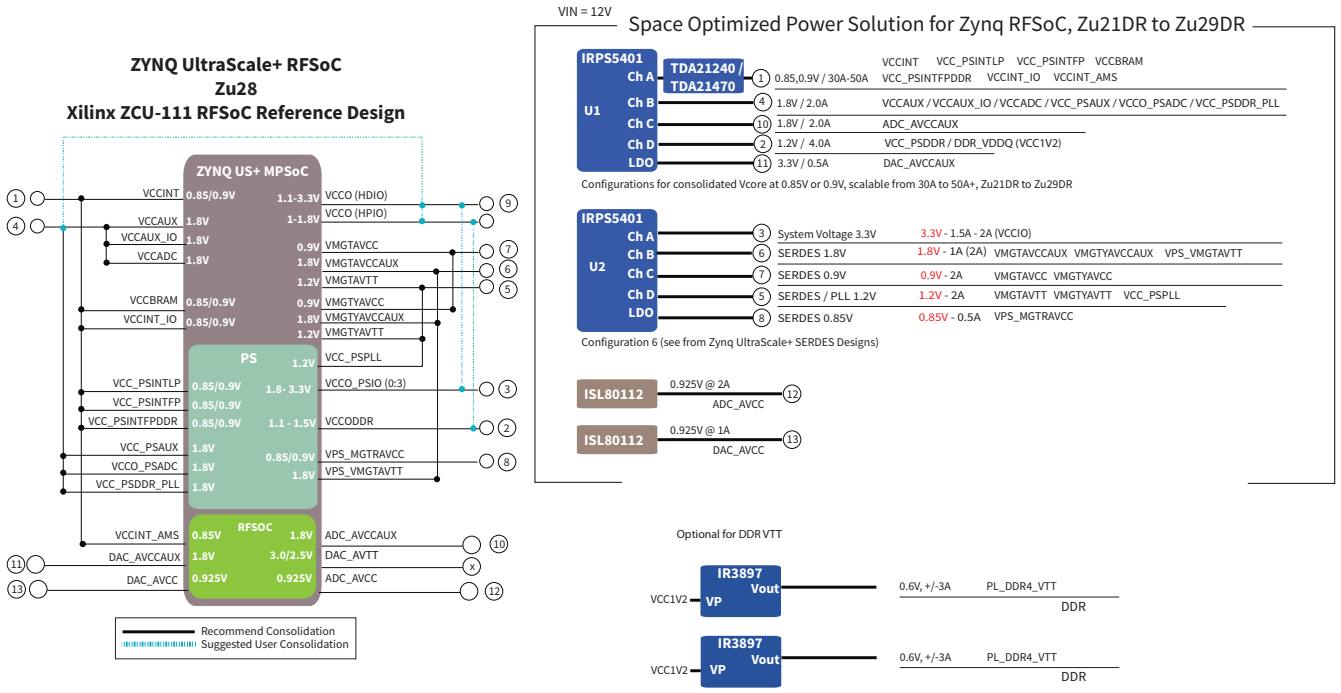

Figure 2: Infineon recommended power map solution for Small Board Space

DC-DC Power Solutions for FPGAs

Infineon Power Map Solutions for Zynq UltraScale+ RFSoC: Zu21 to Zu29

Infineon's power for Zynq UltraScale+ RFSoC is partitioned to allow for modular power design for tight board space for applications for either space optimized needs (Figure 2), power efficiency needs (Figure 3). Figure 4 shows the an exact power implementation for space efficiency on the Xilinx ZCU111 Zynq UltraScale+ RFSoC reference design evaluation kit.

Highlights of Infineon's efficiency optimized solution (Figure 3):

> Power solution optimized with minimum number of voltage rails to Xilinx power optimization recommendations

> Power solution offers scalable power for Zu21 to Zu29 by splitting the PS and PL blocks for better power partition to achieve options for PL Vcores output options at 0.72V, 0.85V or 0.9V for the VCCINT and the PS block Vcore to operate independently at 0.85V and/or 0.9V.

> Power solution for IR35125 + TDA21470 allows for 30A to 70A with 91% to 94% efficiency depending on selection of components

> Power solution offers low noise voltage rails for SERDES for compact space implementation with a single PMIC for minimum lane set; for larger number of SERDES lanes higher current proven options are available using the IR3823, IR38060, IR38062 and IR38063.

> Power solution offers integrated sequencing between the IR35125 and IRPS5401 PMICs using internal timing delays adjustable via I2C/PMBus for setting from 0ms to 127ms

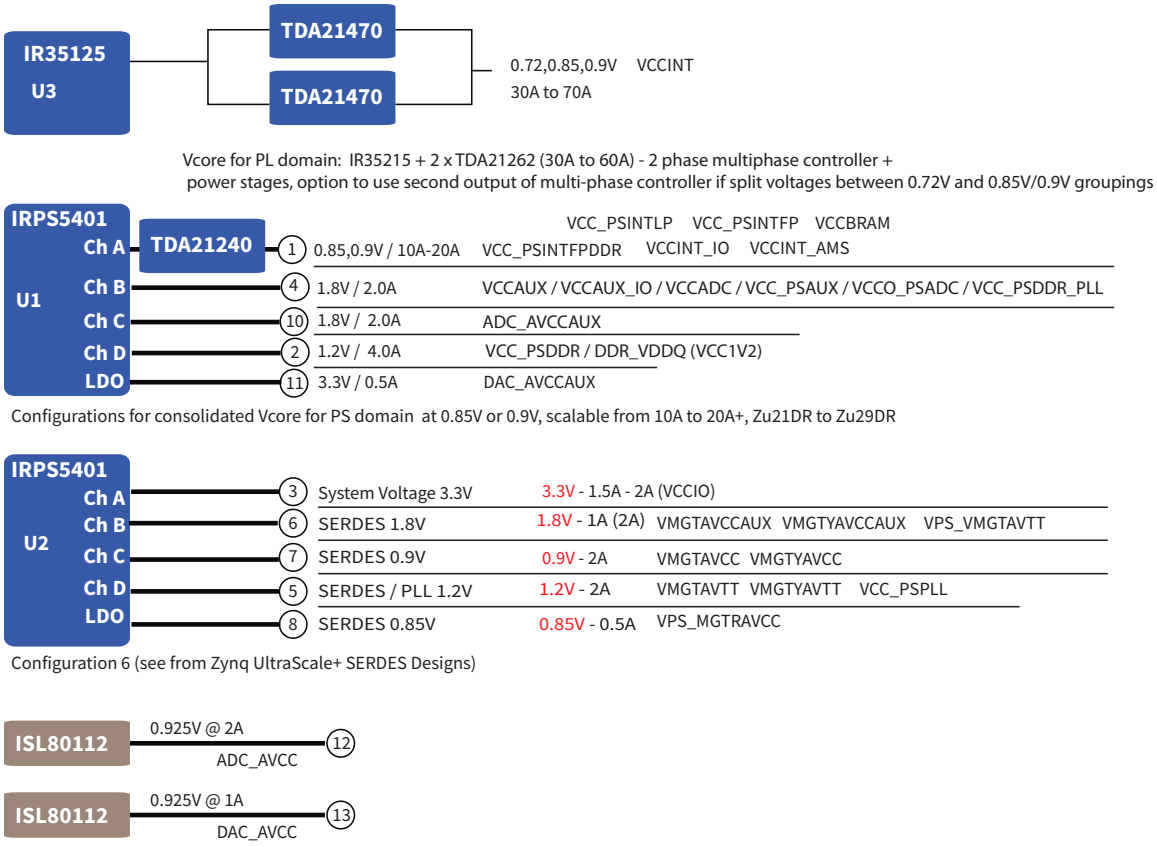

Figure 3: Infineon recommended power map solution for power efficiency

DC-DC Power Solutions for FPGAs

Infineon Power Map Solutions for Zynq UltraScale+ RFSoC: Zu21 to Zu29

Highlights of Infineon's proven solution on Xilinx Zynq UltraScale+ RFSoC Reference Design Evaluation Kit, ZCU11 (Figure 4):

> Power solution optimized with minimum number of voltage rails to Xilinx power optimization recommendations and small space constraints

> Power solution offers scalable power for Zu28 by splitting the PS and PL blocks for better power partition to achieve options for PL Vcores output options at 0.72V, 0.85V or 0.9V for the VCCINT (IR38064) and the PS block Vcore to operate independently at 0.85V and/or 0.9V (IRPS5401 + TDA21240).

> Power solution for the spliting the Vcores between the IR38064 and the IRPS5401 + TDA21240 (x13/x43) ideal for thermal management since each combination allows for operation over the full extended industrial temperature range from -40C to +125C and can allow the VCCINT to operated independently at 0.72V if desired for lower power consumption of the RFSoC.

> Power solution offers low noise voltage rails for SERDES is spread between IRPS5401 PMIC and the IR38060; for larger number of SERDES lanes higher current proven options are available using the IR3823, IR38060, IR38062 and IR38063.

> Power solution offers integrated sequencing between the IR38064and IRPS5401 PMICs using internal timing delays adjustable via I2C/PMBus for setting from 0ms to 127ms

> Power solution for the ZCU111 (see Figure 5) Schematics, BOM, Layout and Performance Data Available from both Xilinx and Infineon sites

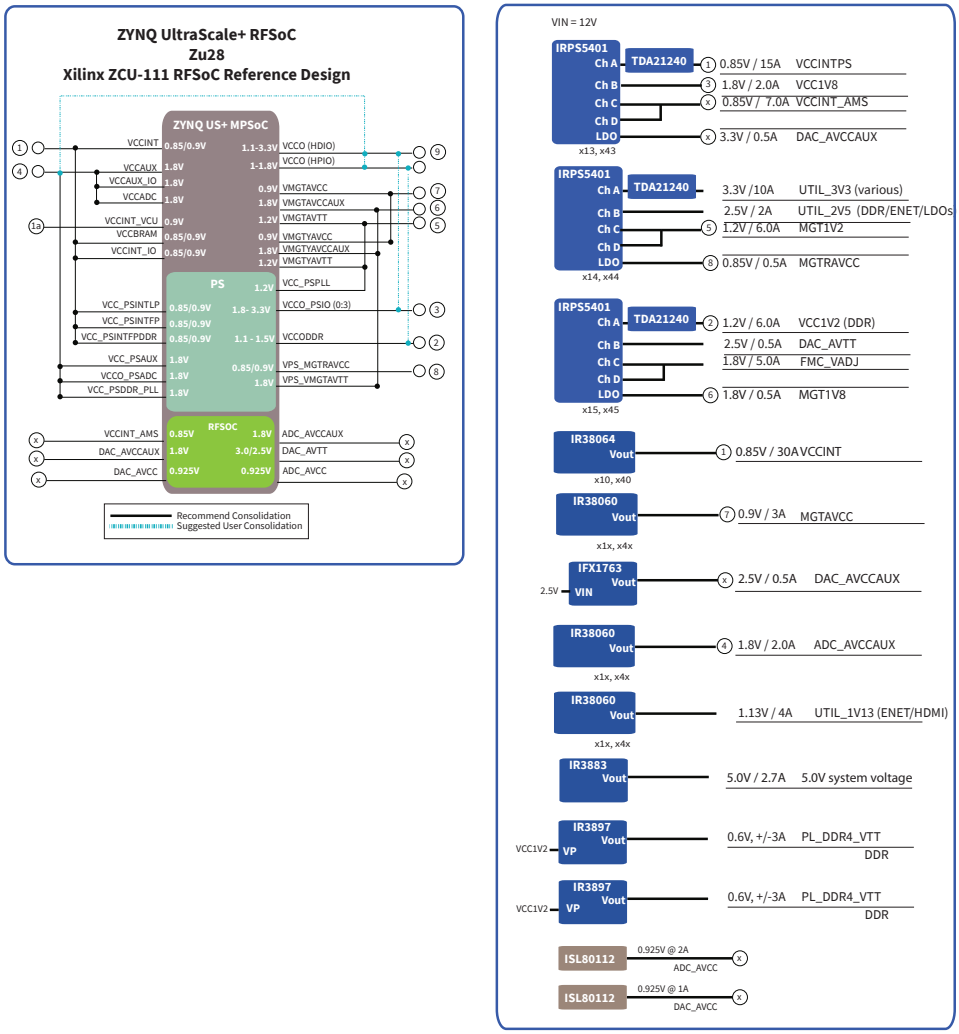

Figure 4: Infineon recommended power map solution for Xilinx ZCU111, Zu28

DC-DC Power Solutions for FPGAs

Infineon Power Solution: Xilinx ZCU111 Zynq UltraScale+ RFSoC Evaluation Kit

Ready to Go Designs

Xilinx offers the ZCU111 Evaluation Kit with complete designs using Infineon's power solutions (Figure 5 below)

> Schematics, BOM, Layout and Performance available from both Xilinx and Infineon
Allegro / CADENCE

> www.infineon.com/xilinx

> Infineon PowIRCenter GUI Software for power design and evaluation (Figure 6)

> ZCU111 Zynq UltraScale+ RFSoC Evaluation Kit Overview (Xilinx)
https://www.xilinx.com/products/boards-and-kits/zcu111.html#overview

> ZCU111 Hardware Schematics and Boards Files (Xilinx)
https://www.xilinx.com/products/boards-and-kits/zcu111.html#documentation

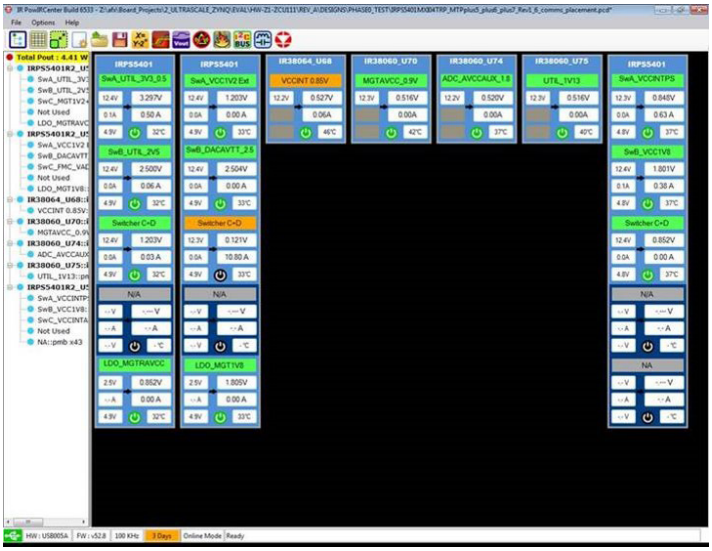

Figure 6: Infineon power GUI on ZCU111, Zu28 Design

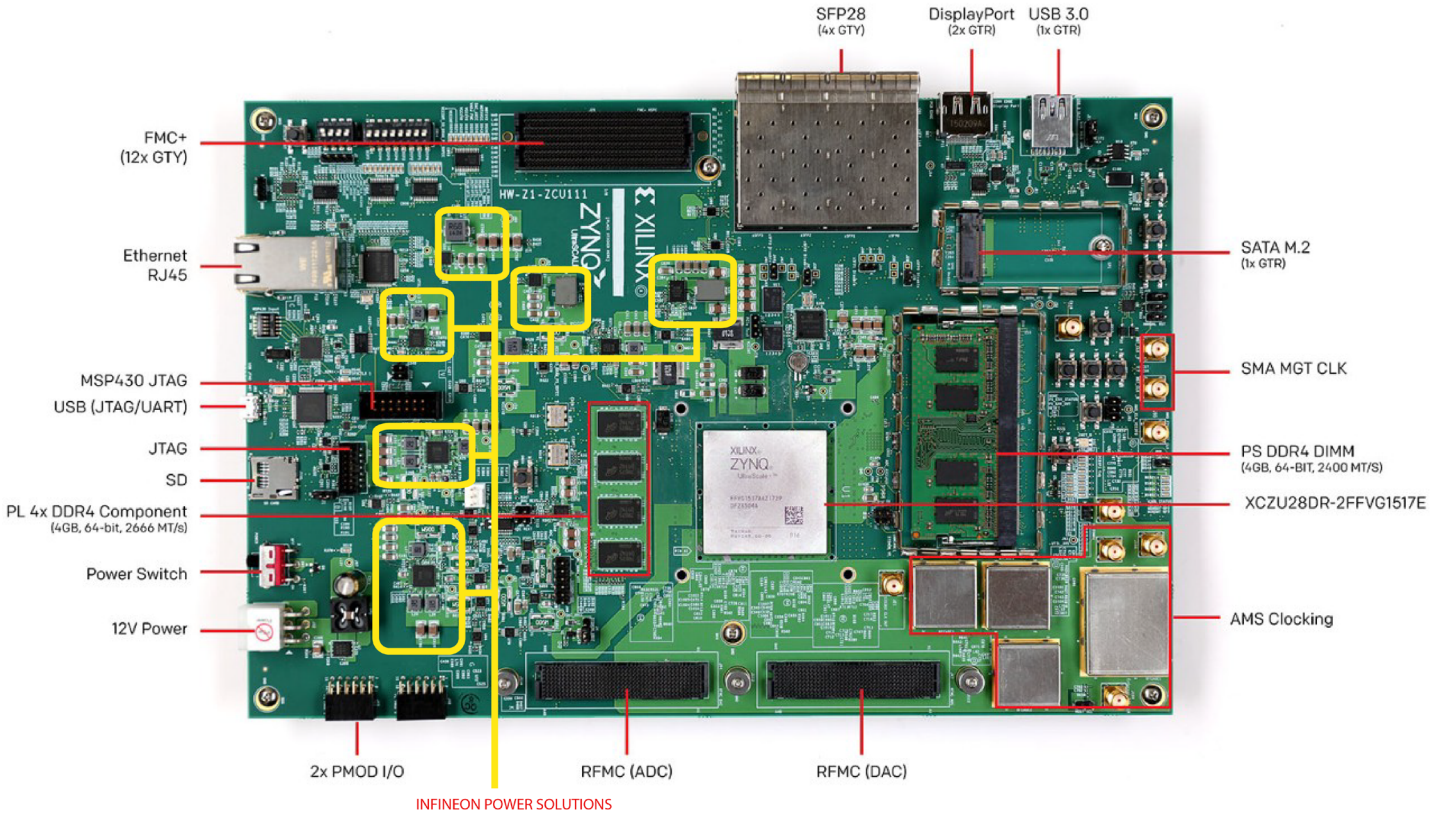

Figure 5: Infineon power solution for Zynq UltraScale+ RFSoC, Zu28 --- ZCU111