Solutions Guide
DC-DC Power Solutions for FPGAs

Infineon Power for FPGA of Xilinx / Zynq® Ultrascale+™ MPSoC for Embedded Vision Applications: Zu07, Zu05 and Zu04 EV Series and Others

Introduction

Infineon has several power solutions for the Zynq® UltraScale+ MPSoC family for Embedded Vision applications. These solutions show brief highlights & high level examples with an actual reference designs with both Xilinx direct on the ZCU104 Evaluation platform and also on Avnet's UltraZED-EV Evaluation platform both featuring the Zu07EV. This brief will also show available Infineon power macros developed with Xilinx for scalable power designs for the Zu04EV, Zu05EV and Zu07EV for space constrained applications.

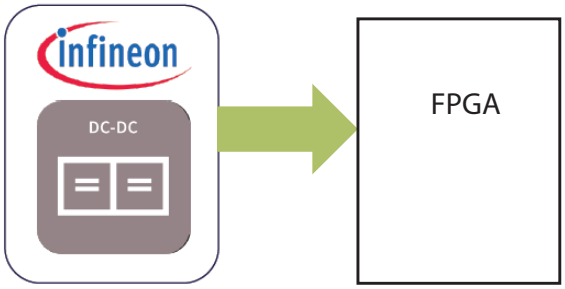

Highlights

> Section 1: High level Infineon power maps for Zu07EV reference design with Avnet on UltraZED-EV Embedded Vision Development Platform
> Section 2: High level Infineon power maps for Zu07EV reference design with Xilinx on ZCU104 Embedded Vision Development Platform
> Section 3: Infineon power cookbook for Zu04EV, Zu05EV and Zu07EV and other MPSoC variants
> Schematics, BOM, Layout and Performance Data Available from both Xilinx, Avnet and/or Infineon
> Integrated voltage sequencing
> Tight board space design for small form factor applications

Section 1: Avnet's - Zynq UltraScale+ MPSoC, UltraZED-EV Embedded Vision Platform:

Figure 1 depicts the Infineon power solution for the Avnet UltraZED-EV platform consisting of Xilinx Zynq US+ MPSoC, Zu07EV, with integrated video codec. This kit is orderable from Avnet and features a modular MPSoC/FPGA SOM card and Carrier board format with various I/O to develop a wide variety of Embedded Vision applications with Sensor Fusion capability. Infineon power focuses on space constrained solution on both the SOM card and the carrier board for tight board space application.

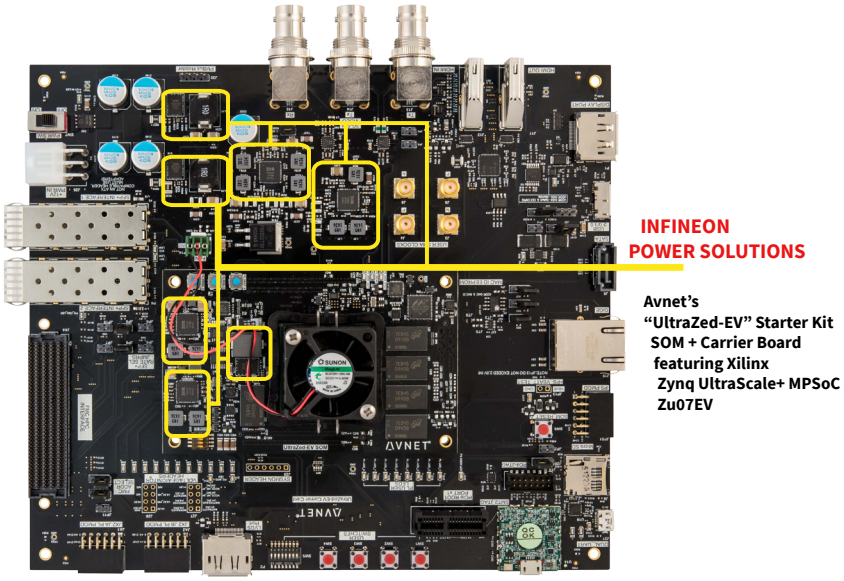

Avnet offers the UltraZED-EV Kit with complete designs using Infineon's power solutions

> Schematics, BOM, Layout and Performance available from both Avnet and Infineon

> www.infineon.com/xilinx

> Infineon PowIRCenter GUI Software for power design and evaluation

> Avnet UltraZED-EV, Zynq UltraScale+ Zu07EV Evaluation Kit Overview (Avnet)
http://www.zedboard.org/product/ultrazed-eg-starter-kit

Figure 1: Infineon power solution for Avnet's UltraZED-EV, Zu07EV

DC-DC Power Solutions for FPGAs

Infineon Power Solutions for Zynq UltraScale+ MPSoC: Zu04EV, Zu05EV, and Zu07EV

Section 1: Avnet's - Zynq UltraScale+ MPSoC, UltraZED-EV Embedded Vision Platform

Infineon's power for Zynq UltraScale+ MPSoC and Avnet's UltraZED-EV is shown in Figure 2 below.
Seen in Figure 2 is the recommend consolidation of the power rails for the MPSoC from Xilinx on the left; while on the right is the actual implementation from Infineon. The power implementation focuses on tight board space design.

Highlights of Infineon's space optimized solution (Figure 2):

> Power solution optimized with minimum number of voltage rails to Xilinx power optimization recommendations.
See also Section 3 for more Infineon compact power solutions for the EV-series.

> Power solution offers scalable power for Zu07EV, Zu05EV and Zu04EV using an IR38064 and IRPS5401 PMIC by spreading the Vcore rails of the PS and PL blocks for the MPSoC and Video codec VCCINT_VCU from -40C to +125C applications for best thermal operation.

> Power solution offers low noise voltage rails for SERDES for compact space implementation using the PMIC(s)

> Power solution offers integrated sequencing between the IR38063 and IRPS5401 PMICs using internal timing delays adjustable via I2C/PMBus for setting from 0ms to 127ms

> Power solution was crafted using Infineon's PowIRCenter GUI tool for design and for monitoring purposes

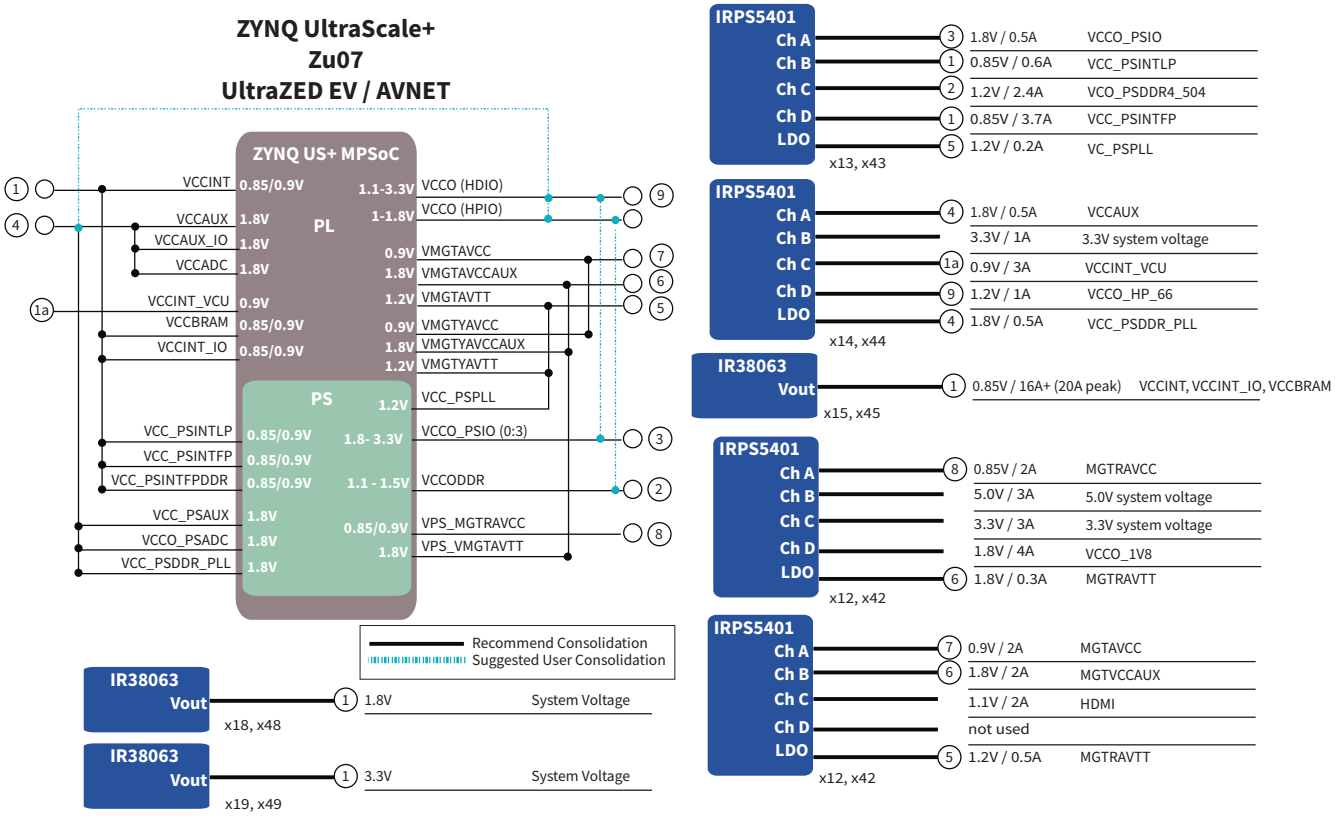

Figure 2: Infineon power map solution for UltraZED-EV, Zu07EV

DC-DC Power Solutions for FPGAs

Infineon Power Solutions for Zynq UltraScale+ MPSoC: Zu04EV, Zu05EV, and Zu07EV

Section 2: Xilinx' - Zynq UltraScale+ MPSoC, ZCU104 Embedded Vision Platform

Figure 3 depicts the Infineon power solution for the Xilinx ZCU104 platform consisting of Xilinx Zynq US+ MPSoC, Zu07EV, with integrated video codec. This kit is orderable from Xilinx and/or Avnet. This kit features a Zynq UltraScale+ MPSoC EV device with video codec and supports many common peripherals and interfaces for embedded vision use cases for development of a wide variety of Embedded Vision applications with Sensor Fusion capability. Infineon power focuses on space constrained solution using the IRPS5401 PMIC and several other Infineon devices.

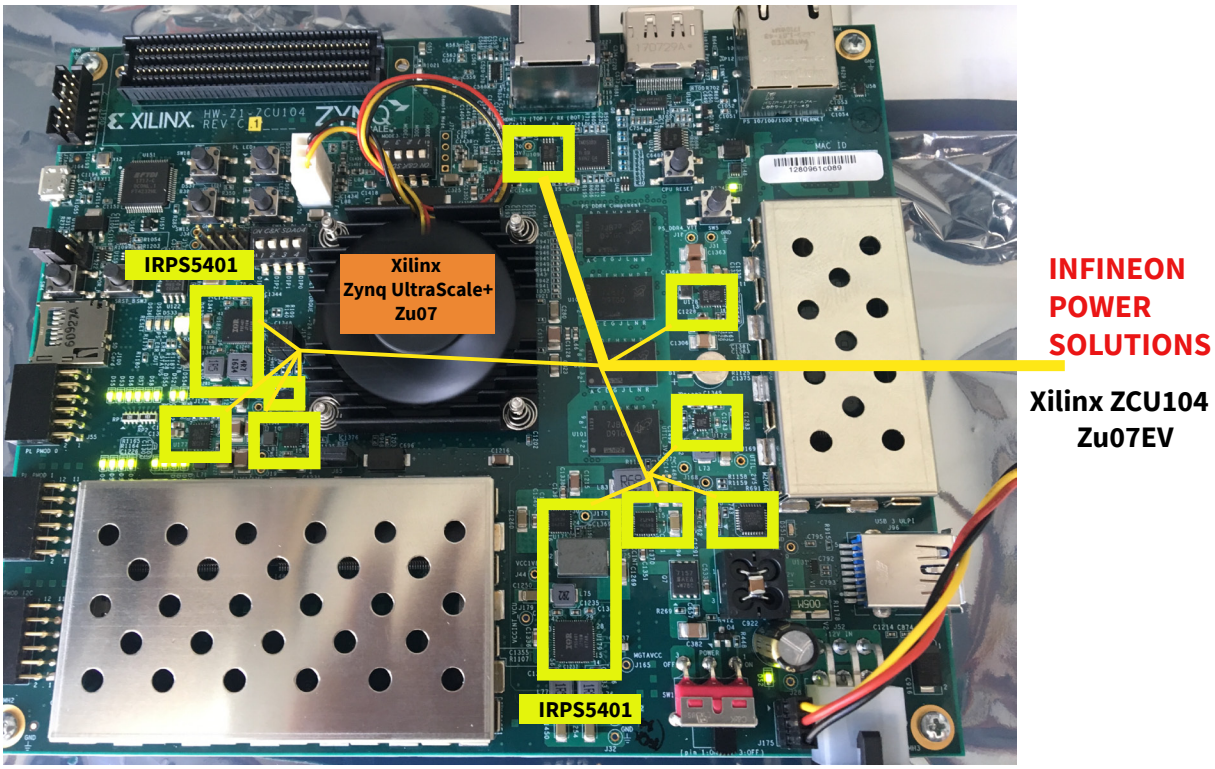

Figure 3: Infineon power solution for Xilinx ZCU104, Zu07EV

Xilinx offers the ZCU104 Kit with complete designs using Infineon's power solutions

> Schematics, BOM, Layout and Performance available from both Xilinx and Infineon

> www.infineon.com/xilinx

> Infineon PowIRCenter GUI Software for power design and evaluation

> ZCU104 Zynq UltraScale+ MPSOC Zu07EV Evaluation Kit Overview (Xilinx)
https://www.xilinx.com/products/boards-and-kits/zcu104.html

> ZCU104 Hardware Schematics and Boards Files (Xilinx)
https://www.xilinx.com/products/boards-and-kits/zcu104html#documentation

DC-DC Power Solutions for FPGAs

Infineon Power Solutions for Zynq UltraScale+ MPSoC: Zu04EV, Zu05EV, and Zu07EV

Section 2: Xilinx' - Zynq UltraScale+ MPSoC, ZCU104 Embedded Vision Platform

Infineon's power for Zynq UltraScale+ MPSoC for Xilinx ZCU104 is shown in Figure 4 below.
Seen in Figure 4 is the recommend consolidation of the power rails for the MPSoC from Xilinx on the left; while on the right is the actual implementation from Infineon. The power implementation focuses on tight board space design.

Highlights of Infineon's space optimized solution (Figure 4):

> Power solution optimized with minimum number of voltage rails to Xilinx power optimization recommendations.
See also Section 3 for more Infineon compact power solutions for the EV-series.

> Power solution offers scalable power for Zu07EV, Zu05EV and Zu04EV using two IRPS5401 PMIC + TDA21240 Power stage combination consolidating the Vcore rails from the PL and PS block of the MPSoC. This approach allows for power scalability for the Zu07, Zu05 and/or Zu04. The Video codec VCCINT_VCU is powered independently using a IR3897. These solutions operate for -40C to +125C applications for best thermal operation.

> Power solution offers low noise voltage rails for SERDES for compact space implementation using the PMIC, analog regulators and LDO.

> Power solution offers integrated sequencing between the IRPS5401 PMICs using internal timing delays adjustable via I2C/PMBus for setting from 0ms to 127ms

> Power solution was crafted using Infineon's PowIRCenter GUI tool for design and for monitoring purposes

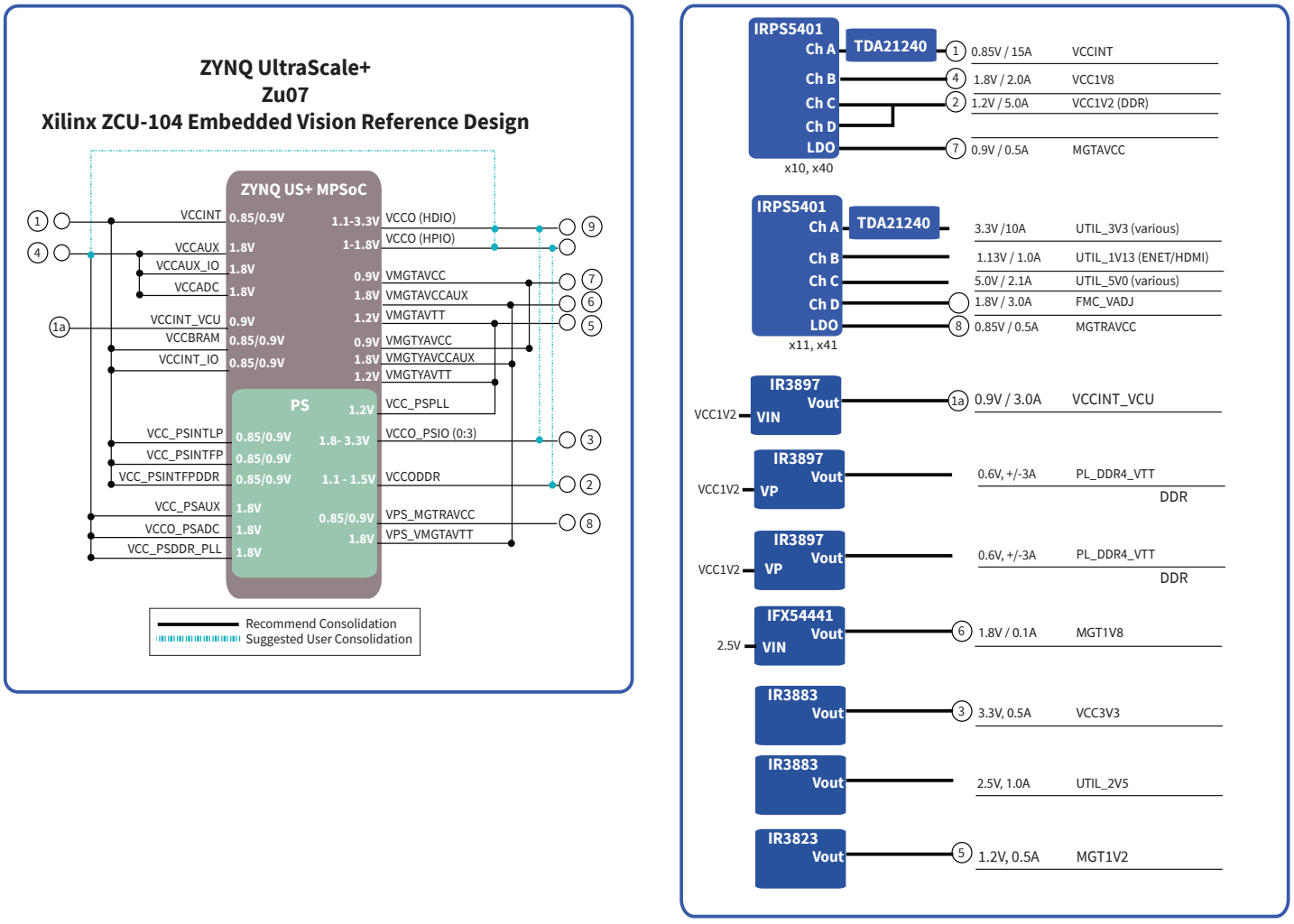

Figure 4: Infineon power map solution for Xilinx ZCU104, Zu07EV

DC-DC Power Solutions for FPGAs

Infineon Power Solutions for Zynq UltraScale+ MPSoC: Zu04EV, Zu05EV, and Zu07EV

Section 2: Xilinx' - Zynq UltraScale+ MPSoC, ZCU104 Embedded Vision Platform

PERFORMANCE DATA - EXAMPLE

Infineon's is a PROVEN power solution for the Zynq UltraScale+ MPSoC for Xilinx ZCU104, Zu07EV.

Below is an excerpt from Xilinx and Infineon's comprehensive PERFORMANCE VALIDATION REPORT for the power rails of the ZCU104 reference design. Note that all the rails were validated on this design; including the integrated power sequencing scheme.

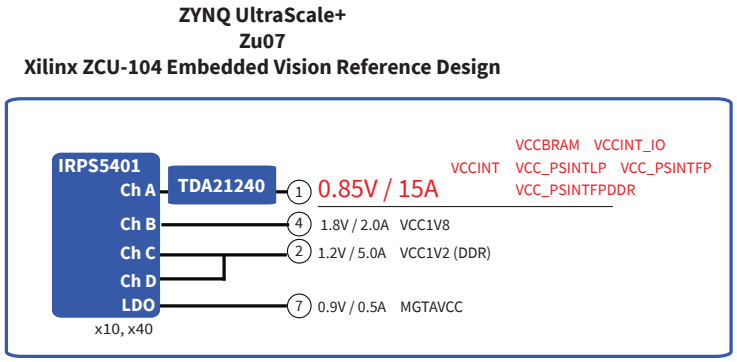

Measurement	Result	Pass/Fail	Test Condition
Vout	0.849V (0.852V) 0.840V (0.848V)	Pass	0A 15A
DC Ripple	11.2mV 10.8mV	Pass	0A 15A
Isense	0.25A 5.13A 10A 14.25A	Pass	0A 5A 10A 14.5A
Vac(droop)	4.4mV	Pass	10.75A to 14.5A
Vac(overshoot)	5.0mV	Pass	14.55A to 10.75A

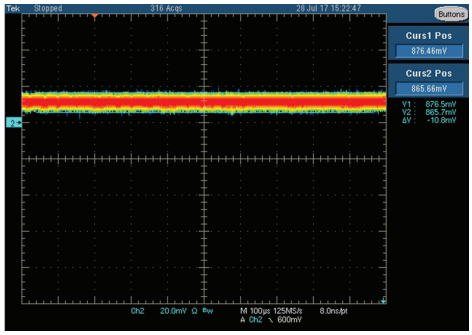

VCCINT DC Ripple, 15A

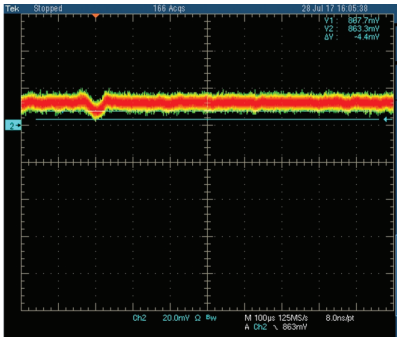

VCCINT ac ripple load

Figure 5: Infineon power map solution for Xilinx ZCU104, Zu07EV

Example Vcore rails of the Zu07EV

Device: IRPS5401 + TDA21240

Conditions:
VCCINT group rails: IRPS5401 channel A
Vin, 12V
Vout, 0.85V
Iout(pk), 15A
Istep, 3.75A
Iramp, 1A/us

Vout Measurement Location, C1216
Load Test Location, J25/C696/C697
SW Node Measurement Location, L82

DC-DC Power Solutions for FPGAs

Infineon Power Solutions for Zynq UltraScale+ MPSoC: Zu04EV, Zu05EV, and Zu07EV

Section 3: Infineon's Power Macros for EV series of the Zynq UltraScale+ MPSoC

Figure 6 depicts the Infineon power macros for space optimized solution for the Xilinx Zynq US+ MPSoC, EV series with integrated video codec. These designs were collaborated with Xilinx and are available from Infineon. The combination of these 4 power macros allows for scalable power design on the Vcore voltages from 5A to 40A using the combination of the IRPS5401 PMIC and external power stages, TDA21242 (25A) and TDA21240 (40A). Options for SERDES and non-SERDES is available. All of the solutions below include integrated sequencing.

- Power solution for Zu07EV without SERDES: Use Configurations 8 and 9
- Power solution for Zu07EV with SERDES: Use Configurations 8 and 10
- Power solution for Zu05EV and/or Zu04EV without SERDES: Use Configurations 7 and 9
- Power solution for Zu05EV and/or Zu04EV with SERDES: Use Configurations 7 and 10

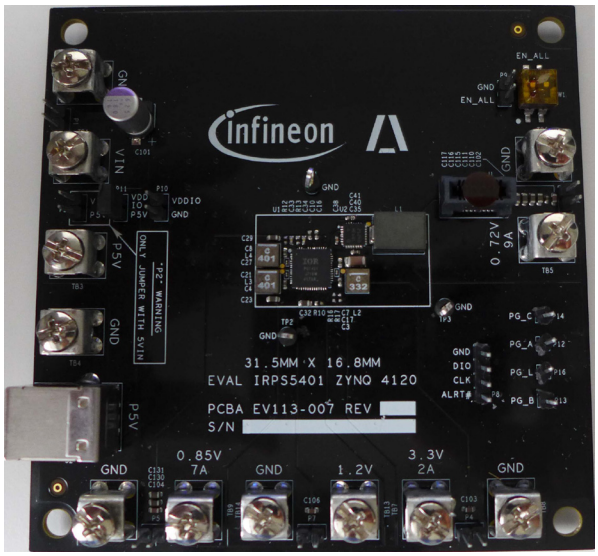

(a) Power macro Zu4EV/Zu05EV - Configuration 7

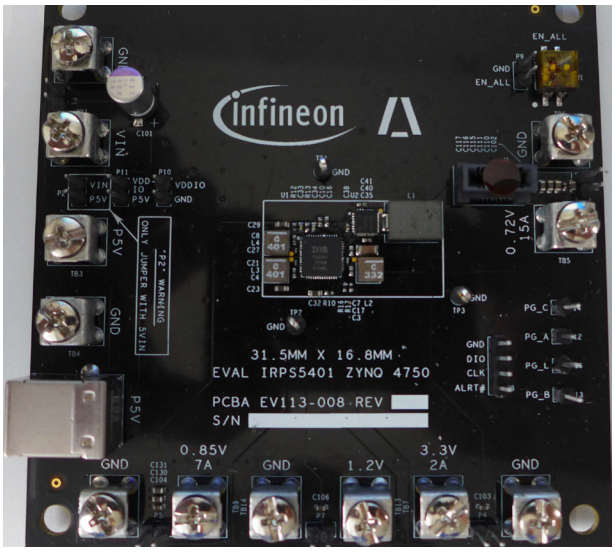

(b) Power macro Zu07EV - Configuration 8

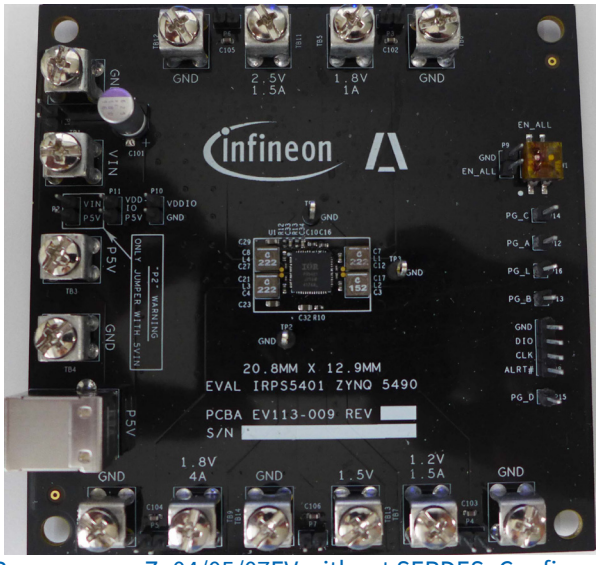

(d) Power macro Zu04/05/07EV without SERDES- Configuration 9

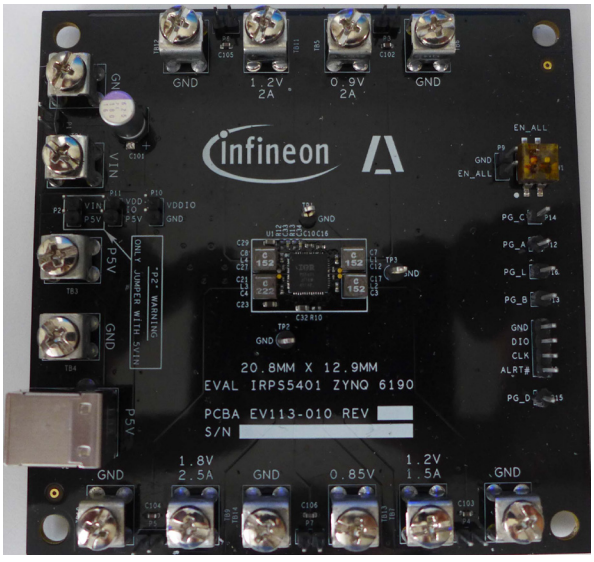

(b) Power macro SERDES Zu07/05/04EV - Configuration 10

Figure 6a,b,c,d: Infineon power macros for Xilinx EV Series, Zu07EV, Zu05EV, Zu04EV

DC-DC Power Solutions for FPGAs

Infineon Power Solutions for Zynq UltraScale+ MPSoC: Zu04EV, Zu05EV, and Zu07EV

Section 3: Infineon's Power Macros for EV series of the Zynq UltraScale+ MPSoC

Figure 7 depicts the Infineon power maps for space optimized power macros for the Xilinx Zynq US+ MPSoC, EV series with integrated video codec. These were designs were collaborated with Xilinx and are available from Infineon. The combination of these 4 power macros allows for scalable power design on the Vcore voltages from 5A to 40A using the combination of the IRPS5401 PMIC and external power stages, TDA21242 (25A) and TDA21240 (40A). Options for SERDES and non-SERDES is available. All of the solutions below include integrated sequencing.

- Power solution for Zu07EV without SERDES: Use Configurations 8 and 9
- Power solution for Zu07EV with SERDES: Use Configurations 8 and 10
- Power solution for Zu05EV and/or Zu04EV without SERDES: Use Configurations 7 and 9
- Power solution for Zu05EV and/or Zu04EV with SERDES: Use Configurations 7 and 10

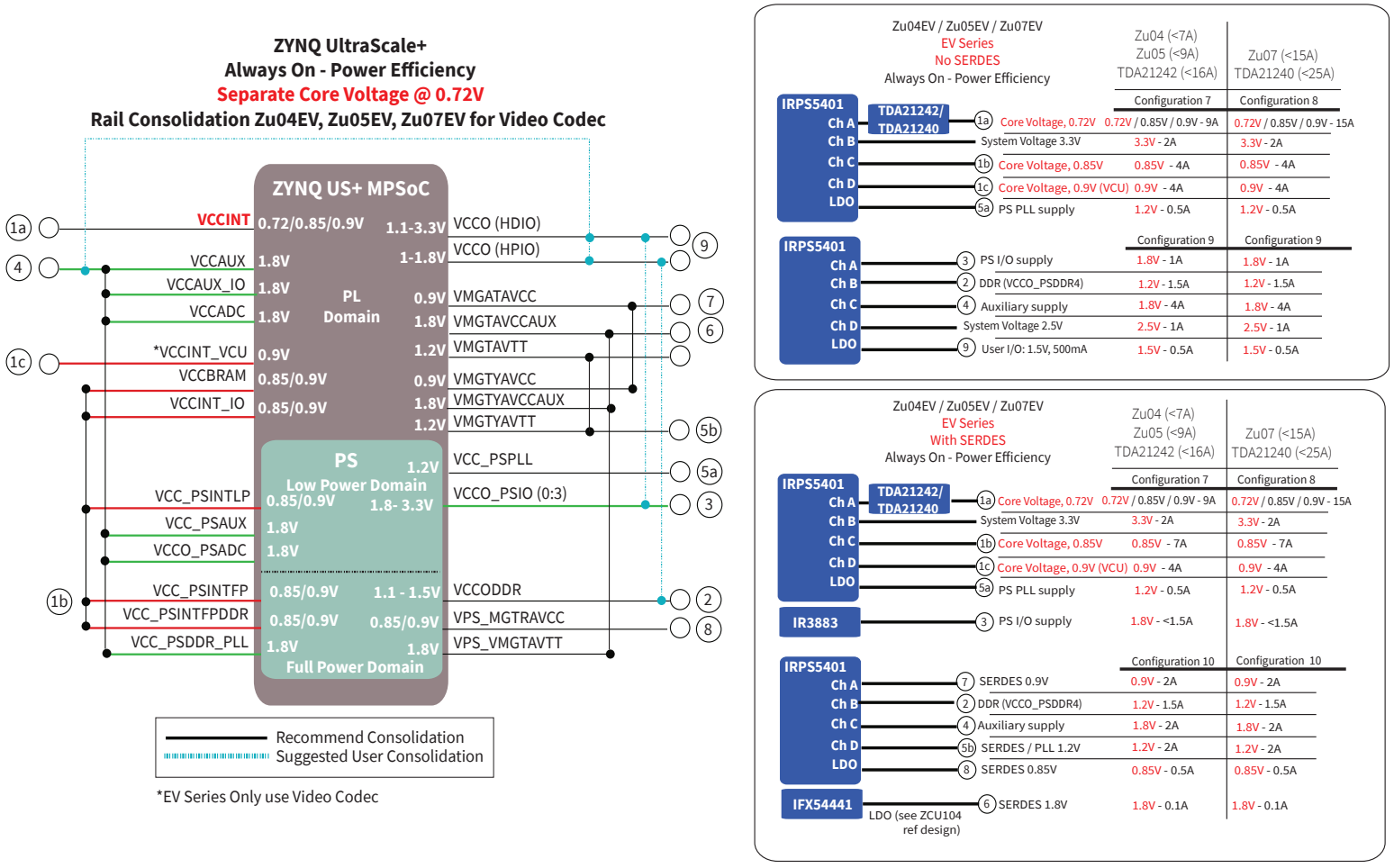

Figure 7: Infineon power map solution for EV Series of the Zynq UltraScale+ MPSoC

DC-DC Power Solutions for FPGAs

Infineon Power Solutions for Zynq UltraScale+ MPSoC: Zu04EV, Zu05EV, and Zu07EV

Section 3: Infineon's Power Macros for EV series of the Zynq UltraScale+ MPSoC

Infineon offers the Zynq UltraScale+ MPSoC power macros with complete designs solutions. These are optimized designs specifically for the MPSoC.

> Schematics, BOM, Layout and Performance available from Infineon. Currently available in ORCAD/Cadence and Altium. Mentor pending.
> www.infineon.com/xilinx

> Infineon PowIRCenter GUI Software for power design and evaluation

Figure 8 provides an example power schematic for the main rail for the Zu07EV MPSoC with emphasis of scalable power for the Vcore for the Zu04EV, Zu05EV and Zu07EV; integrated voltage sequencing; minimum BOM count and high integration for tight board space applications. This design features the IRPS5401 5 Output PMIC and the TDA21240 40A power stage.

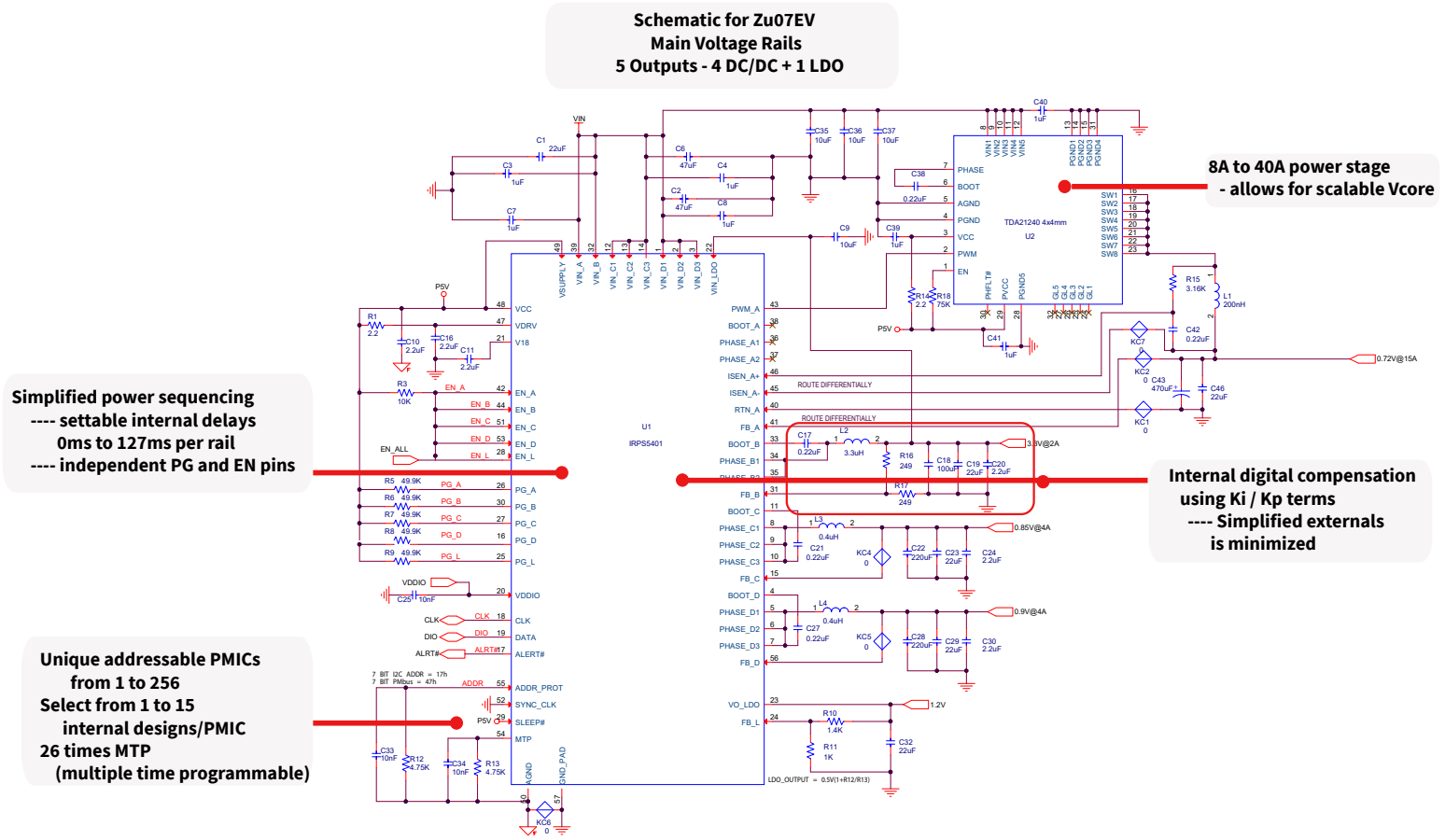

Figure 8: Infineon power schematic example for Zu07EV's main rails - Zynq US+ Power Macro EV113-008 (Configuration 8)

DC-DC Power Solutions for FPGAs

Infineon Power Solutions for Zynq UltraScale+ MPSoC: Zu04EV, Zu05EV, and Zu07EV

Section 3: Infineon's Power Macros for EV series of the Zynq UltraScale+ MPSoC

Figure 9 provides an example power layout for the main rail for the Zu07EV MPSoC with emphasis of scalable power for the Vcore for the Zu04EV, Zu05EV and Zu07EV; integrated voltage sequencing; minimum BOM count and high integration for tight board space applications. Infineon offers various layout configurations that are fitting for practical embedded vision applications for common form-factors such as 1) PCI-express for narrow rectangle PCB footprint (see Figure 9a); or for 2) SOM (System on Module) or CCD/Camera Modules for thinner "L-shaped" PCB footprints (see Figure 9b), where the voltage rails "wrap around" the MPSoC.

Each of these design features the IRPS5401 5 Output PMIC and the TDA21240 40A power stage offering scalable Vcore voltages for any of the EV series: Zu04EV, Zu05EV and Zu07EV with the same layout design. Additionally, a separate output is also provided for the VCCINT_VCU rail at 0.9V for the video codec. This compact design contains an internal voltage sequencer as well and options for I2C/PMBus fault and telemetry management and reporting functions.

The layout "snippets" are available today in ORCAD/Cadence and Altium for "drop and place" design; and soon Infineon will offer Mentor tool set layout formats. Note that these are turnkey practical designs. Additional layout flexibility is also possible to displace the Vcore (channel A) inductor and power stage (TDA21240) closely to the POL (point of load) since the IRPS5401 has a differential amplifier feedback loop. Hence for allowing for more creative PCB placement for odd shaped layouts techniques in space constraint designs.

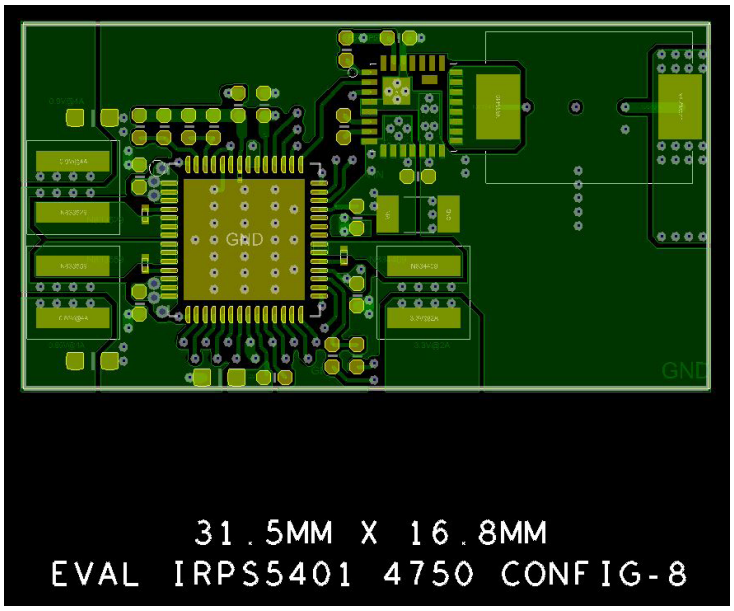

Figure 9(a): Rectangular Layout Example for PCI-express form-factor

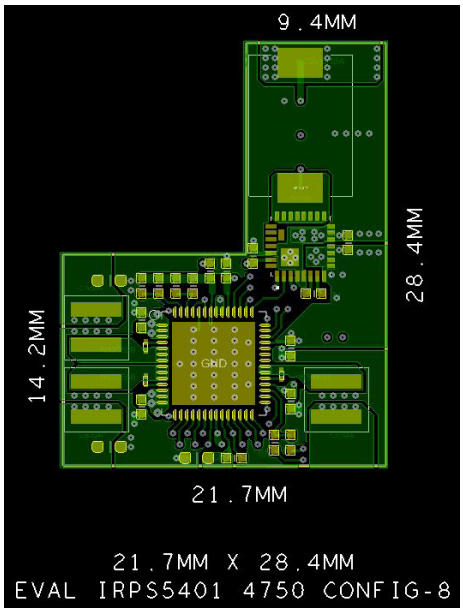

Figure 9(b): "L-shaped" Layout Example for System on Module (SOM) or Camera/CCD modules so the power can "wrap" around the MPSoC

Figure 9: Infineon power layout for Zu07EV's main rails - Zynq US+ Power Macro EV113-008 (Configuration 8)

DC-DC Power Solutions for FPGAs

Infineon Power Solutions for Zynq UltraScale+ MPSoC: Zu04EV, Zu05EV, and Zu07EV

Section 3: Infineon's Power Macros for EV series of the Zynq UltraScale+ MPSoC

PERFORMANCE DATA - EXAMPLE

Infineon's is a PROVEN power solution for the Zynq UltraScale+ MPSoC for Xilinx, EV Series. Below is data for the power solution for the Zu07EV.

Below is an excerpt from Infineon's comprehensive PERFORMANCE VALIDATION for the Xilinx Zynq Power Macros. Figure 10(a) shows the DC accuracy for the VCCINT voltage rail at 0.72V at ~12A active load to be less that 1% DC accuracy; while Figure 10(b) shows the VCCINT rail at setup load response from 11A to 15A to be well below 3% AC accuracy specifications.

Again, this design is scalable for VCCINT core voltage design from 10A to 40A; hence covering the range of performance for the EV series.

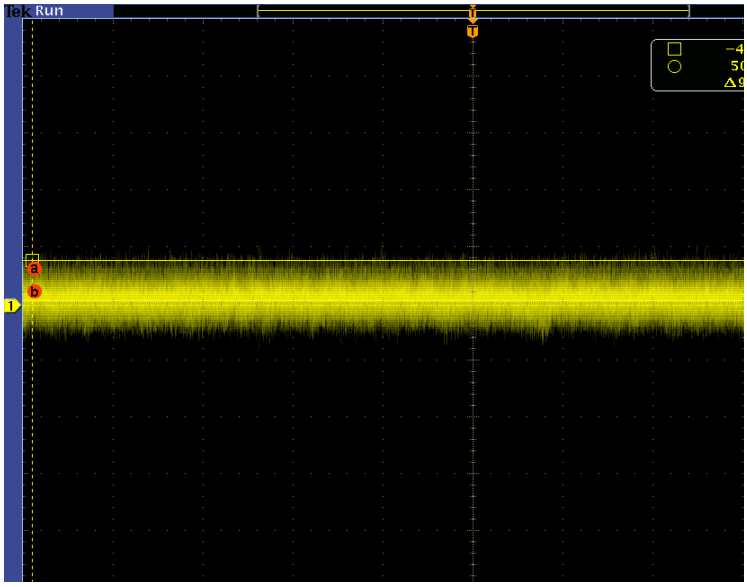

Figure 10(a): IRPS5401 + TDA21240 VCCINT < 1% DC at load

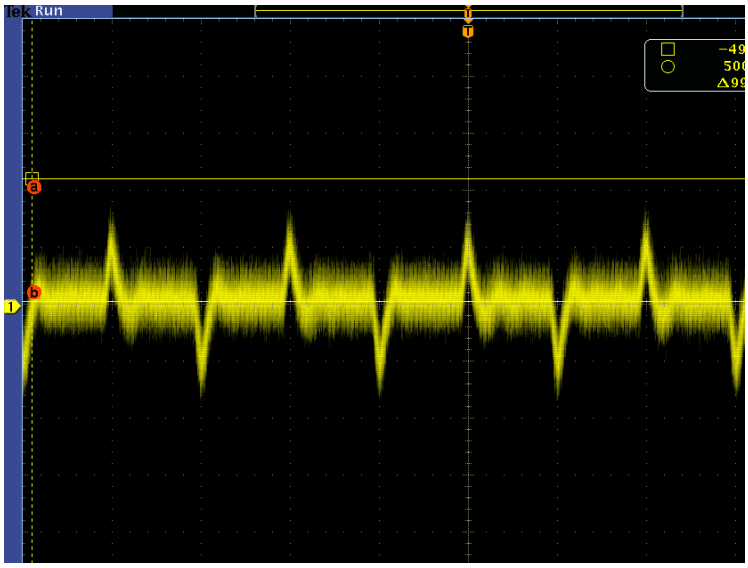

Figure 10(b): IRPS5401 + TDA21240 VCCINT <3% AC accuracy at load

Figure 10: Infineon power performance data example for the VCCINT rail of the Zu07EV EV113-008 (Configuration 8)